BFGoodrich
Aerospace

JcAIR Test Systems

NAV 2000R
GENERATOR (HIGH POWER)

GOODRICH

MAINTENANCE MANUAL

NAV 2000R
GENERATOR (HIGH POWER)

MANUAL NUMBER: 06-0520-80
REVISION: 25
DATE: 06/25/02

This document is proprietary to JcAIR Test Systems, Goodrich Corporation, and is not to be reproduced or otherwise disseminated without the written consent of JcAIR Test Systems, Goodrich Corporation.

400 New Century Parkway – New Century, Kansas – 66031-0009
Telephone: (800) 237-2831 / (913) 764-2452 Fax: (913) 782-5104
www.aerospace.goodrich.com

GOODRICH

GENERAL NOTICE:

On April 17, 2001, the shareholders of The BFGoodrich Company approved Goodrich Corporation as the company's new legal name, setting the stage for the company to implement its new corporate identity program effective June 1, 2001.

The reason for the change is to recognize the transformation of our company from a supplier of low-margin, low-growth commodity products to one with a leading position in the aerospace industry and an important base in engineered industrial products.

JcAIR Test Systems is a business unit of Sensor Systems, Goodrich Corporation and will continue to do business under the name JcAIR Test Systems.

You will see our transformation to Goodrich over time as all of our documentation is changed to reflect our new logo.

WARNING: INFORMATION SUBJECT TO EXPORT CONTROL LAWS

This manual may contain information subject to the International Traffic in Arms Regulation (ITAR) or the Export Administration Regulation (EAR) of 1979 which may not be exported, released, or disclosed to foreign nationals inside or outside of the United States without first obtaining an export license. A violation of the ITAR or EAR may be subject to a penalty of up to 10 years imprisonment and a fine of up to $1,000,000 under 22 U.S.C.2778 of the Arms Export Control Act of 1976 or section 2410 of the Export Administration Act of 1979. Include this notice with any reproduced portion of this document.

We welcome your comments concerning this manual. Although every effort has been made to keep it free of errors, some may occur. When reporting a specific problem, please describe it briefly and include the manual part number, the paragraph or figure number and the page number.

Send your comments to:

JcAIR Test Systems
400 New Century Parkway
New Century, KS 66031

Attn: Product Support

Phone: 800-237-2831 / 913-764-2452

GOODRICH

HARDWARE WARRANTY - Manufacturer warrants that for a period of one (1) year from date of original purchase, Product (hardware only) will be free from defects in material, workmanship and design, and will conform to the applicable specifications. Manufacturer will, at its expense, promptly repair or replace the Product, provided that (a) Buyer notifies Manufacturer of the defect within the warranty period, and (b) Buyer returns the Product to Manufacturer.

The foregoing does not apply to any Product failure arising from:

- Improper or inadequate maintenance by Buyer
- Buyer supplied software or interfacing
- Unauthorised modification or misuse
- Improper site preparation or maintenance

Domestic Customers.....One way freight charges will be paid by Goodrich Corporation JcAIR Test Systems (JcAIR) for Product that is returned for warranty repair within the warranty period. If the Product is shipped to JcAIR with collect freight charges, it will be returned freight collect. If the unit is shipped to JcAIR with freight charges prepaid, it will be returned to the customer freight prepaid.

International Customers One way domestic (Continental United States) freight charges will be paid by JcAIR on Product returned for warranty repair within the warranty period. If the Product is shipped to JcAIR with collect freight charges, it will be returned freight collect. If the unit is shipped to JcAIR with freight charges prepaid, it will be returned to the customer freight prepaid.

SOFTWARE WARRANTY - Manufacturer warrants that for a period of one (1) year from date of original purchase, Product (Software only), will be free from defects in material, workmanship and design, and will conform to the applicable specifications in effect at the time of purchase. This warranty does not apply to any defect or noncompliance caused by modifications not made by Manufacturer or use or combination of the Software with products, goods, services or other items not furnished by Manufacturer, other than the hardware for which the Software was designed. Manufacturer shall promptly correct any copy of the Software that fails to comply with the foregoing warranty, provided that Buyer gives Manufacturer prompt written notice of such failure before the expiration of the warranty period.

WARRANTY LIMITATIONS - MANUFACTURER MAKES NO REPRESENTATION OR WARRANTY WITH REGARD TO THE PRODUCT, SOFTWARE OR OTHER ITEMS FURNISHED UNDER THIS AGREEMENT, EXCEPT AS SPECIFICALLY SET FORTH ABOVE

THE WARRANTIES OF MANUFACTURER AND THE REMEDIES OF BUYER SET FORTH ABOVE ARE EXCLUSIVE AND IN SUBSTITUTION FOR, AND BUYER HEREBY WAIVES, RELEASES AND DISCLAIMS ALL OTHER WARRANTIES OF MANUFACTURER AND ALL OTHER REMEDIES OF BUYER, EXPRESS OR IMPLIED, ARISING BY LAW OR OTHERWISE, WITH RESPECT TO ANY DEFECT, DEFICIENCY OR NONCONFORMITY IN THE PRODUCT, THE SOFTWARE OR OTHER ITEM FURNISHED BY OR ON BEHALF OF MANUFACTURER UNDER THIS AGREEMENT, INCLUDING, BUT NOT LIMITED TO, ANY IMPLIED WARRANTY OF MERCHANTABILITY OR FITNESS FOR A PARTICULAR PURPOSE; OR IMPLIED WARRANTY ARISING FROM COURSE OF PERFORMANCE, COURSE OF DEALING OR USAGE OF TRADE. THE MANUFACTURER'S WARRANTIES UNDER THIS AGREEMENT ARE SOLELY FOR THE BENEFIT OF BUYER.

GOODRICH

ELECTROSTATIC DISCHARGE GENERAL WARNINGS FOR ALL EQUIPMENT

CAUTION: THIS EQUIPMENT MAY CONTAIN ELECTROSTATIC DISCHARGE (ESD) SENSITIVE COMPONENTS. TO PREVENT ESD SENSITIVE EQUIPMENT FROM POSSIBLE DAMAGE, OBSERVE THE FOLLOWING PRECAUTIONS WHEN HANDLING ANY ESD SENSITIVE COMPONENTS, OR UNITS CONTAINING ESD SENSITIVE COMPONENTS:

a. Maintenance or service personnel must be grounded though a conductive wrist strap, or a similar grounding device, using a 1 MΩ series resistor for equipment protection against static discharge, and personal protection against electrical shock.

b. All tools must be grounded (including soldering tools) that may come into contact with the equipment. Hand contact will provide sufficient grounding for tools that are not otherwise grounded, provided the operator is grounded through an acceptable grounding device such as a wrist strap.

c. Maintenance or service of the unit must be done at a grounded, ESD workstation.

d. Before maintenance or service of the equipment, disconnect all power sources, signal sources, and loads connected to the unit.

e. If maintenance or service must be performed with power applied, take precautions against accidental disconnection of equipment components. Specifically, do not remove integrated circuits or printed circuit boards from equipment while the equipment has power applied.

f. All ESD sensitive components are shipped in protective tubes or electrically conductive foam. The components should be stored using the original container/package when not being used or tested. If the original storage material is not available, use similar or equivalent protective storage material.

g. When ESD sensitive components are removed from a unit, the components must be placed on a conductive surface, or in an electrically conductive container.

h. When in storage or not being repaired, all printed circuits boards must be kept in electrically conductive bags, or other electrically conductive containers.

i. Do not unnecessarily pick up, hold, or directly carry ESD sensitive devices.

Failure to comply with these precautions may cause permanent damage to ESD sensitive devices. This damage can cause devices to fail immediately, or at a later time without apparent cause.

REVISION HISTORY BY DRAWING NUMBER

MANUAL: NAV 2000R Generator (High Power)

REVISION: 25 – June 25, 2002

DRAWING NO.	REV. LEVEL
Section I	03
Section II	02
Section III	04
Section IV	02
Section V	02
01-0520-80	05
25-0520-80	05
00-0520-80	03
20-5742-03	01
25-5742-01	00
02-5742-00	03
20-5743-10	07
25-5743-00/10	03
02-5743-10	04
40-5743-00/10	00
20-5745-20	00
25-5745-20	00
02-5745-20	00
20-5761-30	00
25-5761-30	01
02-5761-30	00
20-5852-10	04
25-5852-10	06
02-5852-10	08
20-5866-00	03
25-5866-00	04
02-5866-00	02
20-5867-00	02
25-5867-00	04
02-5867-00	04
20-5868-00	10
25-5868-00	10
02-5868-00	12
20-5900-00	02
25-5900-00	04
02-5900-00	02
20-5951-00	04
25-5951-00	03
02-5951-00	02
20-6156-00	00
25-6156-00	02
20-6157-00	00
25-6157-00	01
02-6157-00	01
20-9520-52	06
25-9520-52	04
02-9520-52	02
40-9520-52	02
20-9520-53	01
25-9520-53	02
02-9520-53	03
20-9520-54	01
25-9520-54	02
20-9520-57	02
25-9520-57	00
02-9520-57	00
20-9520-62	00
25-9520-62	00
20-9520-80	11
25-9520-80	08
02-9520-80	09
55-0520-00	01
55-0520-03	01
55-0520-51	04
04-0520-80	06
Appendix A	02

TABLE OF CONTENTS

SECTION I
GENERAL INFORMATION

SECTION		PAGE NUMBER
1.1	GENERAL INFORMATION	1-1
1.2	EQUIPMENT DESCRIPTION	1-1
1.3	TECHNICAL CHARACTERISTICS	1-1
1.4	UNITS AND ACCESSORIES SUPPLIED	1-7
1.5	UNITS AND ACCESSORIES REQUIRED	1-7
1.6	OPTIONAL EQUIPMENT	1-7
1.7	SERVICE INFORMATION	1-7

SECTION II
INSTALLATION

2.1	GENERAL INFORMATION	2-1
2.2	UNPACKING AND INSPECTION OF EQUIPMENT	2-1
2.3	EQUIPMENT INSTALLATION	2-1
2.4	POST INSTALLATION CHECK	2-1

SECTION III
OPERATION

3.1	GENERAL INFORMATION	3-1
3.2	FRONT PANEL DESCRIPTION	3-1
3.3	REAR PANEL DESCRIPTION	3-2
3.4	POWER UP PROCEDURE	3-3
3.5	LOCAL USER INTERFACE	3-3
3.5.1	NAV 2000R MODES	3-3
3.5.2	MENU LAYOUT DESCRIPTION	3-3
3.5.3	GETTING AROUND IN THE MENUS	3-5
3.5.4	CHANGING FIELDS DATA / ALPHANUMERIC	3-5
3.5.4.1	EDITING NUMERIC OR ALPHANUMERIC FIELDS	3-5
3.5.4.2	ENTERING FIELDS VALUES WITH THE KEYBOARD	3-6
3.5.4.3	TOGGLE FIELD EDITING	3-6
3.5.4.4	USING HOT KEYS	3-6
3.5.4.5	FR LEVEL ENTRY	3-7
3.5.5	VOR MODE FIELD DEFINITIONS	3-7
3.5.6	VOR AUDIO CONTROL MOD (VORa) FIELD DEFINITION	3-10
3.5.7	LOCALIZER MODE FIELD DEFINITIONS	3-10
3.5.8	LOC AUDIO CONTROL MODE (LOCa) FIELD DEFINITION	3-14
3.5.9	GLIDESLOPE MODE FIELD DEFINITIONS	3-14
3.5.10	ADF MODE FIELD DEFINITIONS	3-17
3.5.11	MARKER BEACON MODE FIELD DEFINITION	3-18
3.5.12	COMMUNICATION MODE FIELD DEFINITION	3-19
3.5.13	SELCAL MODE	3-20
3.5.14	UTILITY MENU	3-23
3.5.15	EXTERNAL MODULATION MODE	3-25

SECTION III
OPERATION (Con't)

3.5.16 CALIBRATION MODE 3-25
3.5.17 DISPLAY DEFINITION DURING POWER ON SEQUENCE 3-25
3.5.18 STORING & RECALLING SETUPS 3-26
3.6 REMOTE USER INTERFACE DESCRIPTION 3-26
3.6.1 GPIB REMOTE INTERFACE DESCRIPTION 3-26
3.6.2 COMMAND LIST 3-27
3.7 USING THE EXTERNAL AUDIO INPUT 3-36
3.8 USING AUDIO OUTPUT 3-37

SECTION IV
THEORY OF OPERATIONS

4.1 GENERAL INFORMATION 4-1
4.2 UNIT DESCRIPTION 4-1
4.2.1 FRONT PANEL 4-1
4.2.2 REAR PANEL 4-1
4.2.3 CHASSIS INTERIOR LAYOUT 4-2
4.3 FUNCTIONAL DESCRIPTION 4-2
4.3.1 RF OUTPUT LEVEL 4-2
4.3.2 FREQUENCY 4-2
4.3.3 VOR SIGNAL GENERATOR 4-2
4.3.4 ILS SIGNAL GENERATOR 4-2
4.3.5 COM SIGNAL GENERATOR 4-3
4.3.6 SYSTEM COMPUTER BOARD THEORY OF OPERATION 4-3
4.3.7 DSP BOARD THEORY OF OPERATION 4-4
4.3.8 RF MODULATOR MODULE DESCRIPTION 4-5
4.3.9 MODULATOR GENERAL OPERATIONAL DESCRIPTION 4-6
4.3.10 AUDIO BOARD OPERATION 4-6
4.3.11 RF MODULATOR BOARD OPERATION 4-7
4.3.12 PROGRAMMABLE STEP ATTENTUATOR CIRCUIT 4-8
4.3.13 SYNTHESIZER 4-8
4.3.14 REVERSE POWER PROTECTION MODULE OPERATION 4-10
4.4 NAV 2000R SOFTWARE 4-10
4.4.1 SELF TEST 4-10
4.4.2 CALIBRATION 4-11
4.4.3 MEMORY USAGE AND INITIALIZATION 4-11
4.5 DETAILED CIRCUIT DESCRIPTION 4-12
4.5.1 MOTHER BOARD CIRCUIT DESCRIPTION 4-12
4.5.2 SYSTEM COMPUTER (CPU) BOARD CIRCUIT DESCRIPTION 4-13
4.5.3 DSP BOARD CIRCUIT DESCRIPTION 4-14
4.5.4 RF MODULATOR CIRCUIT DESCRIPTION 4-14
4.5.5 RF MODULATOR MODULE BLOCK DIAGRAM 4-14
4.5.6 RF MODULATOR MODULE BUS INTERFACE CIRCUITRY (AUDIO BOARD – A1) 4-15
4.5.7 EXTERNAL AUDIO CONTROL 4-15
4.5.8 INTERNAL & EXTERNAL MODULATION SUMMING 4-16
4.5.9 AUDIO HIGH/LOW INDICATION 4-16

SECTION IV
THEORY OF OPERATIONS (Con't)

4.5.10 % MODULATION LEVEL SET ATTENTUATOR 4-16
4.5.11 % MODULATION CENTERING & CALIBRATION 4-17
4.5.12 VOLTAGE REFERENCE 4-17
4.5.13 DETECTED AUDIO HI/LO INDICATION 4-17
4.5.14 PROGRAMMABLE STEP ATTENTUATOR CONTROL 4-17
4.5.15 RF MODULATOR BOARD 4-18
4.5.16 MODULATING SIGNAL TEMP. COMPENSATION NETWORK 4-18
4.5.17 AUDIO MODULATED AMPLIFIER 4-18
4.5.18 RF LEVELING AMPLIFIER 4-19
4.5.19 FIXED GAIN AMPLIFIERS 4-19
4.5.20 DETECTOR 4-20
4.5.21 LPF & INTEGRATOR 4-20
4.5.22 SCALING & RF LEVEL SET 4-20
4.5.23 RF HIGH/LOW INDICATION 4-21
4.6 PROGRAMMABLE STEP ATTENTUATOR 4-21
4.7 SYNTHESIZER CIRCUITS 4-21
4.7.1 REFERENCE/CONTROL BOARD CIRCUITS 4-22
4.7.2 RF/OUTPUT BOARD CIRCUITS 4-23
4.7.3 MAIN VCO 4-24
4.7.4 400 MHz VCO 4-24
4.8 REVERSE POWER PROTECTION 4-24

SECTION V
MAINTENANCE

5.1 BILLS OF MATERIAL, ASSEMBLY DRAWINGS, SCHEMATICS AND TEST PROCEDURES 5-1

APPENDIX A

GPIB COMMAND QUICK REFERENCE A-1

BFGoodrich
Aerospace
JcAIR Test Systems

400 New Century Parkway
P.O. Box 9
New Century, KS 66031-0009
(800) 237-2831
(913) 764-2452
Fax: (913) 782-5104
http://www.jcair.com

Declaration of Conformity

DECLARATION OF CONFORMITY

Manufacturer's Name:	BFGoodrich Aerospace, JcAIR Test Systems Division
Manufacturer's Address:	400 New Century Parkway New Century, KS 66031-0009 USA

Declares that the products

Product Name:	NAV2000R-50, NAV2000R-70, NAV2000R-80
Model Number(s):	01-0520-50, 01-0520-70, 01-0520-80
Product Options:	All options associated with listed models are covered.

Conform to the following product specifications and carry the CE-marking accordingly.

Low Voltage Directive 73/23/EEC:	IEC 61010-1:1990 / EN 61010-1:1993
EMC Directive 89/336/EEC:	EN 61326:1998 IEC 61326:1997

Date: 10/31/00

Chuck Nehring, Director
Quality Assurance/Customer Support

Safety and Regulatory Information

Review this product and related documentation to familiarize yourself with safety markings and instructions before you operate this equipment.

WARNING The **WARNING** notice denotes a hazard. It calls attention to a procedure, practice, or the like, that, if not correctly performed or adhered to, could result in personal injury. Do not proceed beyond a **WARNING** notice until the indicated conditions are fully understood and met.

CAUTION The **CAUTION** notice denotes a hazard. It calls attention to an operating procedure, practice, or the like, which, if not correctly performed or adhered to, could result in damage to the product or loss of important data. Do not proceed beyond a **CAUTION** notice until the indicated conditions are fully understood and met.

Caution (refer to accompanying documents). Attention – refer to the manual. This symbol indicates that information about usage of a feature is contained in the manual.

Equipment Markings

The following markings may appear on this equipment:

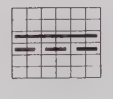

Direct current. This symbol indicates that the equipment requires direct current input.

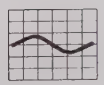

Alternating current. This symbol indicates that the equipment requires alternating current input.

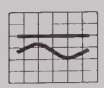

Both direct and alternating current. This symbol indicates that the equipment requires either ac or dc input at the same connector.

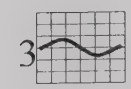

Three-phase alternating current. This symbol indicates that the equipment requires 3-phase ac input.

Earth (ground) terminal. This symbol indicates the ground (earth) terminal.

Protective conductor terminal. This symbol indicates the protective ground (earth) terminal.

Frame or chassis terminal. This symbol indicates the frame or chassis terminal for connection to ground.

Equipotentiality. This symbol indicates an equipotentiality terminal.

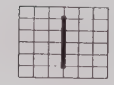

On (Supply). This symbol indicates that the power line switch is ON.

Off (Supply). This symbol indicates that the power line switch is OFF.

Standby. This symbol indicates that the power line switch is in STANDBY.

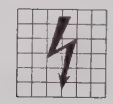

Caution, risk of electric shock. Danger – high voltage.

Caution, hot surface. Danger – high temperature surface.

Caution (refer to accompanying documents). Attention – refer to the manual. This symbol indicates that information about usage of a feature is contained in the manual.

In-position of a bistable push control. This symbol indicates the in (on) position of a bistable push control.

Out-position of a bistable push control. This symbol indicates the out (off) position of a bistable push control.

CE Mark. ™ of the European Community.

Fuse Symbol. To indicate a fuse.

Warnings

WARNING Do not use the equipment in a manner not specified in this manual!

WARNING Equipment should only be serviced by authorized personnel.

WARNING

To avoid fire hazard, use only a fuse identical in type, voltage rating, and current rating as specified on the fuse rating label and/or in the manual.

Proper Power Cord

Use only the power cord and connector appropriate for the voltage and plug configuration in your country. Use only a power cord that is in good condition. Refer cord and connector changes to qualified service personnel.

Do Not Operate in Explosive Atmospheres

To avoid explosion, do not operate the equipment in an atmosphere of explosive gas.

Do Not Attempt to Operate if Protection may be Impaired.

If the equipment appears damaged or operates abnormally, protection may be impaired. Do not attempt to operate it. When in doubt, have the equipment serviced.

Cleaning Warning

Keep the equipment dry to avoid electrical shock to personnel or damage to the equipment. To prevent damage, never apply solvents to the equipment housing. For cleaning, wipe the equipment with a cloth that is lightly dampened with water, mild detergent, or alcohol. Do not use aromatic hydrocarbons, chlorinated solvents, or methanol-based fluids.

Operating Position

Normal operating position is horizontal, on a flat surface. Vertical position is not considered normal operation.

WARNING This is a Safety Class 1 Product (provided with a protective earthing ground incorporated in the power cord). The mains plug shall only be inserted in a socket-outlet provided with a protective earth contact. Any interruption of the protective conductor inside or outside of the product is likely to make the product dangerous. Intentional interruption is prohibited.

WARNING Equipment is not intended for wet locations. Miscellaneous liquids on or in the equipment could cause hazardous conditions.

Safety Maintenance

The operator should check the detachable power supply cord condition. The equipment should not be operated if the mains inlet is cracked or broken. Any obvious damage to the case (from a drop or fall) should be checked by service personnel for loose or damaged parts inside. See parts lists for approved replacement parts.

WARNING TO SERVICE PERSONNEL.

Ensure that power is disconnected before removal of any covers.

WARNING The Power switch on the Front Panel is not the mains disconnect. Mains disconnect is accomplished by disconnecting the detachable power supply cord at the appliance coupler or at the mains plug. Ensure the power cord is easily accessible and removable, in the event of an emergency, which requires immediate disconnection.

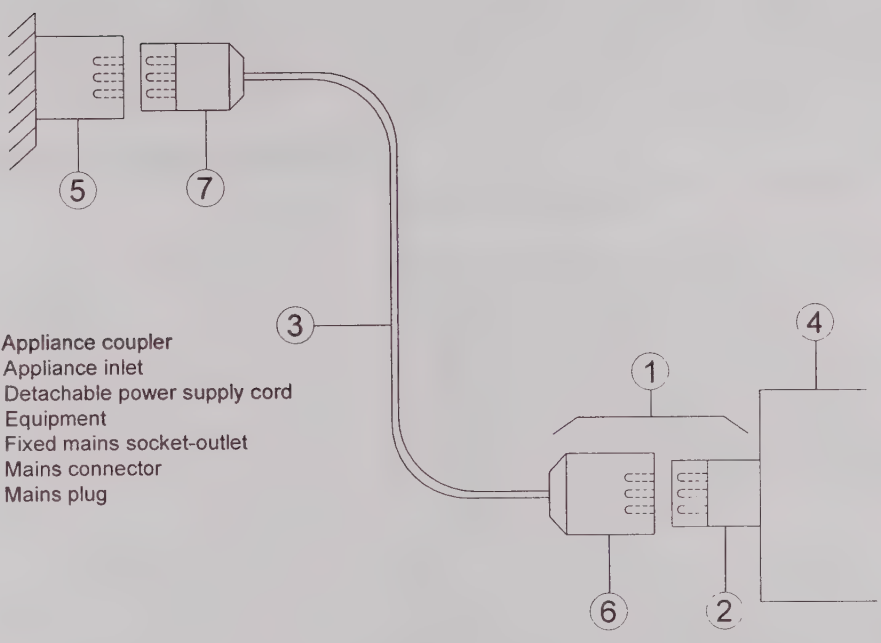

1. Appliance coupler
2. Appliance inlet
3. Detachable power supply cord
4. Equipment
5. Fixed mains socket-outlet
6. Mains connector
7. Mains plug

SECTION I
GENERAL INFORMATION

1.1 GENERAL INFORMATION

The JcAIR Test Systems, Goodrich Corporation, NAV 2000R generates ADF, MARKER BEACON, HF/VHF, COM and SELCAL signals for test applications.

1.2 EQUIPMENT DESCRIPTION

The NAV 2000R VOR/ILS/COM Signal Generator contains necessary hardware and firmware to provide modulated RF signals to verify operation of VOR navigational, ILS (Glideslope, Localizer, and Marker Beacon), and COM communications LRU systems for aircraft. An external modulation signal can either be summed with internal audio signals or separately controlled. The modulated RF output is connected directly to the LRU. The NAV 2000R can be locally or remotely operated.

1.3 TECHNICAL CHARACTERISTICS

Mains Fuses

The equipment uses two type F, 1.6 A, 250 V, 5 mm X 20 mm fuses (A1F1 and A1F2).

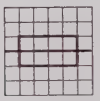

To replace these fuses, which are located on the rear panel inside the Appliance Inlet (A1FL1):

1. Disconnect the appliance coupler.
2. With a flat blade screwdriver, or similar tool, open the cover.
3. With a flat blade screwdriver, or similar tool, remove the fuse holder/power input selection subassembly.
4. Replace fuse(s) with kind indicated above.
5. Replace the fuse holder/power input selection subassembly so that voltage selected appears in window when the cover is snapped into place.

Ac Power Source

The equipment is intended to operate from an ac power source that will not apply more than 253 V ac between the supply conductors or between either supply conductor and ground. A protective ground connection by way of the grounding conductor in the power cord is required for safe operation.

Environmental Specifications

The environmental specifications are as follows.

Operating Temperature	5 °C to 40 °C.
Storage Temperature	-20 °C to +85 °C.
Relative Humidity	Maximum of 80% for temperatures up to 31 °C decreasing linearly to 50% at 40 °C.
Operating Altitude	2 000 m maximum.
Size	14.5 cm H x 44.2 cm W x 49.0 cm D (5.7" H x 17.4" W x 19.3" D)
Mass (Weight)	61.2 kg (135 lbs)
IEC Overvoltage Category	II
Pollution Degree	1

Warm Up Duration	30 min minimum for specified performance.
Ventilation Requirements	Keep the ventilation openings clear.
Cables and Wires	1. It is recommended that all cables connecting to the AUDIO OUTPUT (A3J5), EXTERNAL MOD INPUT (A4A2P1), 10 MHZ OUT (A5A1J7), and 10 MHZ IN (A5A1J6) terminals (ports) use M17/84-RG223 double shielded coaxial cable, or equivalent, properly terminated to BNC connectors. 2. It is recommended that the cable connecting to the RF OUTPUT (A1J1) terminals (port) use M17/75-RG214 double shielded coaxial cable, or equivalent, properly terminated to N connectors.
Non Volatile Memory Life	10 years minimum data retention in the absence of external power.
Equipment Meets These Listed Standards	EN 61010-1 (IEC 61010-1) EN 61328 EN 61326 Class A
Data Input / Output	Compatible with IEEE Standard 488-1978
Electrical Specifications	
Power Requirements	115/230 V 60/50 Hz 750 mA max, 70 W 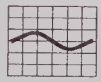
Mains Input Selection	Selection of mains input range is done at the appliance inlet (A1FL1) on the back panel. For 115 V ac ± 10%, set the selector to the 115 V position. For 230 V ac ± 10%, set the selector to the 230 V position. Either selection will accept 50 or 60 Hz. To change the voltage selection: 1. Disconnect the appliance coupler. 2. With a flat blade screwdriver, or similar tool, open the cover. 3. With a flat blade screwdriver, or similar tool, remove the fuse holder/power input selection subassembly. 4. Rotate the assembly and push it back into position. 5. Check that the voltage selected appears in the voltage selection window when the cover is snapped into place.
Max RF OUTPUT Connector Safe Input Power	50 W, 50 V dc

RF Frequency	
Output Frequency Range	150 kHz to 450 MHz
Frequency Resolution	10 Hz
Frequency Drift	± 2.5 ppm
Reference Aging	± 1 ppm per year
Time Base	
External Reference Input	10 MHz ±2.5 ppm (BNC/female connector on back panel) -2 dBm to +20 dBm 5 V dc max
Internal Reference Output	10 MHz, 0 dBm minimum.
RF Output level	+7 dBm to -120 dBm
Accuracy	+7 dBm to -57 dBm ± 1.0 dB -58 dBm to -103 dBm ± 2.0 dB -104 dBm to -120 dBm ± 3.0 dB
Level resolution	0.1 dB
Settling Time	< 250 ms
SWR	< 1.5:1
Output Impedance	50 Ω
Spectral purity	
Harmonics	< -30 dBc, 200 kHz to 400 MHz
Non-harmonics	< -60 dBc at > 5 kHz from carrier
SSB Phase Noise	< -115 dBc/Hz at > 25 kHz from carrier (cw only)

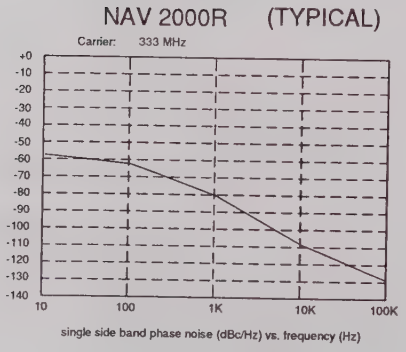

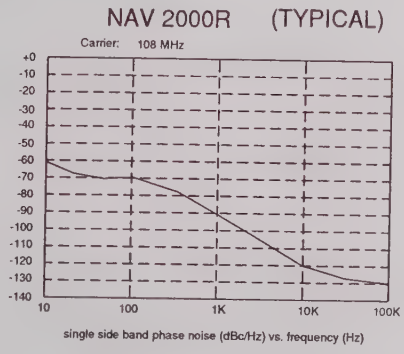

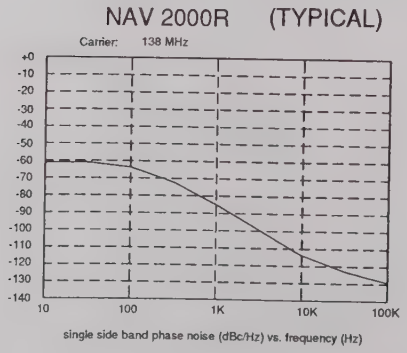

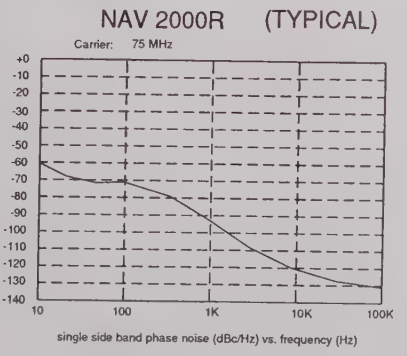

FIGURE 1-1: TYPICAL GRAPH FIGURES

Residual FM	
0.15 - 56.25 MHz	< 25 Hz at 0.05 - 15 kHz
56.25 - 112.50 MHz	< 10 Hz Post Detection
112.50 - 225.00 MHz	< 16 Hz Noise BW
225.00 - 450.00 MHz	< 25 Hz
Residual AM	< 0.1% .05 - 15 kHz Noise BW

VOR mode

Modulation tones

Frequencies	30 Hz reference, 30 Hz variable, 9960 Hz, and 1020 Hz IDENT
Frequency Accuracy	± 0.005%
Frequency Adjustment Range	± 10% Aux Audio = 10 Hz -18000 Hz
Distortion (Audio)	< 0.1% THD
9960 Hz FM deviation	480 ± 1 Hz at default frequencies
Radial range	000.00 to 359.99 degrees (selectable at each 30 degree heading or in 0.01 degree increments)
Radial accuracy (Audio)	± 0.01 degree relative to calibration standard used during calibration.
Radial accuracy (RF)	± 0.05 degree relative to calibration standard used during calibration.

Amplitude Modulation

Range (per tone)	total % mod not to exceed 99%
1020 Hz IDENT	0-99%, Default 30%
30 Hz variable	0-99%, Default 30%
9960 Hz	0-99%, Default 30%
Resolution	0.01%
Overall accuracy	± 2% of setting for 10% to 95% AM
Tone distortion (RF at default)	2% maximum
Total VOR demodulated error	< ± 0.05 degree of selected radial

LOCALIZER mode

Modulation tones

Frequencies	90 Hz, 150 Hz, and 1020 Hz ident
Frequency accuracy	± 0.005%
Frequency adjustment Range	± 10% Aux Audio = 10 Hz -18000 Hz
Distortion (audio)	< 0.1% THD

90/150Hz phase

Fixed	0.0 ± 0.01 deg
Variable Resolution	0.01 degree
Variable Accuracy	± 0.05 degrees

Amplitude modulation	
Range (per tone)	total % mod not to exceed 99%
90 and 150 Hz	
Default	20%
Variable	0 to 99% in 0.01% increments
1020 Hz	
Default	30%
Variable	0 to 99% in 0.01% increments
Accuracy(sum of all tones)	± 2% of setting for 10% to 95%
Tone distortion	2% maximum
(RF at default)	
DDM	
Default	0.000 DDM
Selectable settings	0.000, 0.046, 0.093, 0.155, 0.200 DDM
Variable range	0.400 in 0.001 increments
Total system error	
(audio + modulation)	± 0.0003 @ 0 DDM
	± 0.0012 @ .046 DDM
	± 0.0021 @ .093 DDM
	± 0.0034 @ .155 DDM
	± 0.0053 @ .200 DDM

GLIDESLOPE mode	
Modulation tones	
Frequencies	90 Hz, 150 Hz
Frequency accuracy	± 0.005%
Frequency adjustment range	± 10%
Distortion (audio)	< 0.1% THD
90/150 Hz phase	
Fixed	0.0 ± 0.01 deg
Variable resolution	0.01 degree
Variable accuracy	± 0.05 degrees
Amplitude modulation	
Range (per tone)	total % mod not to exceed 99%
90 and 150 Hz	
Default	40%
Variable	0 to 99% in 0.01% increments
Accuracy (sum of all tones)	± 2% of setting for 10 to 95%
Tone distortion	2% maximum
(RF at default)	
DDM	
Default	0.000 DDM
Selectable settings	0.000, 0.045, 0.091, 0.175, 0.400 DDM
Variable range	0.800 in 0.001 increments
Total system error	
(audio + modulation)	± 0.0003 @ 0 DDM
	± 0.0012 @ .045 DDM
	± 0.0021 @ .091 DDM
	± 0.0038 @ .175 DDM
	± 0.0083 @ .400 DDM

ADF

RF Frequency Range	150 kHz to 25 MHz
Modulation tone	
Preset	1000 Hz
Variable	10 Hz to 18 kHz (0.1 Hz increments)
Frequency accuracy	± 0.005%
Distortion (Audio, 10 Hz to 10 kHz)	< 0.1% THD
Amplitude modulation	
Range	
Preset	95%
Variable	0 to 99% in 0.01% increments
Accuracy	± 2% of setting for 10% to 95%

MARKER BEACON

Modulation tone	
Frequencies	400/1300/3000 Hz
Frequency Adjustment Range	10 Hz to 18 kHz
Adjustment Resolution	0.1 Hz
Frequency Accuracy	± 0.005%
Distortion (Audio only)	< 0.1% THD
Amplitude modulation	
Range	
Preset	95%
Variable	0 to 99% in 0.01% increments

COMM

Modulation tones (two tones selectable)	
Preset	1000 Hz and 2000 Hz
Variable	10 Hz to 18 kHz (0.1 Hz increments)
Frequency accuracy	± 0.005%
Distortion (audio, 10 Hz to 10 kHz)	< 0.1% THD
Amplitude modulation	
Range	total % mod not to exceed 99%
Preset @ 1000 Hz	30%
Variable 10 to 18 kHz	0 to 99% in 0.01% increments
Accuracy	± 2% of setting for 10% to 95%

External modulation

Input impedance	5 kΩ
Maximum modulation depth	99%
Modulation distortion	2% maximum
Modulation bandwidth	10 Hz to 22 kHz
Input level	1 Vpeak

Morse Code (ident) - Programmable in VOR, Localizer or ADF mode

Max Length	6 characters
Rate	programmable
Dot/Dash/spacing times	individually programmable

Audio Output Level	1.414 ± .025 Vrms into 600 Ω Adjustable downward in audio modes

1.4 UNITS AND ACCESSORIES SUPPLIED

NAV 2000R VOR/ILS/COM Generator	JPN 01-0520-80
NAV 2000R Maintenance Manual	JPN 06-0520-80

1.5 UNITS AND ACCESSORIES REQUIRED

The NAV 2000R requires the following item to be interconnected to a remotely operated test equipment environment.

ITEM	DESCRIPTION	TYPE
1	GPIB Cable	It is recommended that a HP type 10833X braided shield cable, or equivalent, be used.

1.6 OPTIONAL EQUIPMENT

ITEM	DESCRIPTION	TYPE
1	Extender Board	JPN 20-5760-00

1.7 SERVICE INFORMATION

If you have any questions regarding service, you may contact the factory at the address listed below:

JcAIR Test Systems, Goodrich Corporation,
400 New Century Parkway
New Century, KS 66031
Phone: (800) 237-2831 / (913) 764-2452
Fax: (913) 782-5104
http://www.aerospace.goodrich.com

SECTION II
INSTALLATION

2.1 GENERAL INFORMATION

This section contains information relating to the unpacking, inspection, and installation of the JcAIR Test Systems, Goodrich Corporation, NAV 2000R VOR/ILS/COM Generator.

2.2 UNPACKING AND INSPECTION OF EQUIPMENT

Exercise extreme care when unpacking the unit and accessories. Make a visual inspection of the NAV 2000R for evidence of damage incurred during shipment. If a claim for damage is to be filed, save the shipping container to substantiate the claim. When all the equipment has been unpacked, return all the packing material to the container for future use in storing and shipping the equipment.

2.3 EQUIPMENT INSTALLATION

The NAV 2000R VOR/ILS/COM generator is manufactured as a bench test unit, but may be rack mounted using optional rack mount handle flanges.

2.4 POST INSTALLATION CHECK

After completing installation of the (TSD) NAV 2000R VOR/ILS/COM Generator, a power-up self-test verifies its operation. The NAV 2000R display will identify any problems found during the power-up self-test.

SECTION III
OPERATION

3.1 GENERAL INFORMATION

This Section describes how to operate the NAV 2000R VOR/ILS/COM generator. It contains information for an initial inspection, general operating information, and local and remote operation. The NAV 2000R can be operated using either the local user interface or the remote user interface. The local user interface uses the front panel keypads and display. The remote interface uses a General Purpose Interface Bus (GPIB). Throughout this manual, GPIB shall be used to mean an interface bus conforming to IEEE Standard 488-1978, "Standard Digital Interface For Programmable Instrumentation".

3.2 FRONT PANEL DESCRIPTION

Figure 3-1 shows the NAV 2000R front panel. Shown on the Figure are the display (including its fields), the mode select keypad, cursor keypad and select key, hot keys keypad, numeric keypad, power switch, and RF output connector.

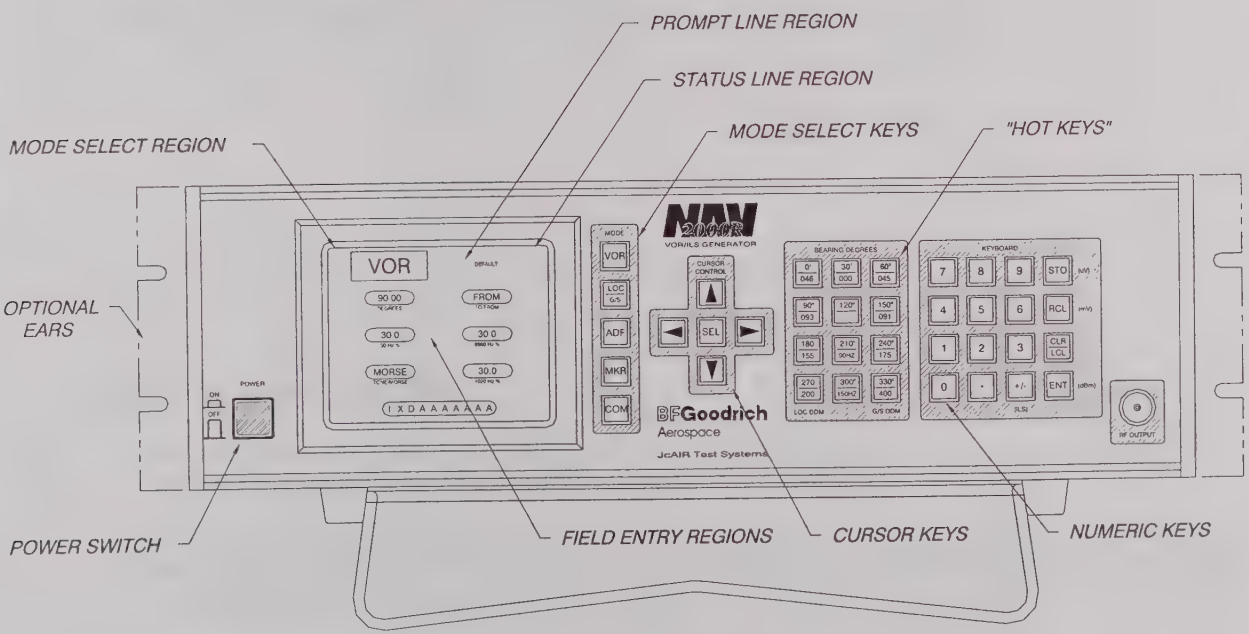

FIGURE 3-1: FRONT PANEL

3.3 REAR PANEL DESCRIPTION

Figure 3-2 shows the NAV 2000R rear panel. Shown on the Figure are the modules, external modulation input, audio output, power connection, and GPIB bus connector.

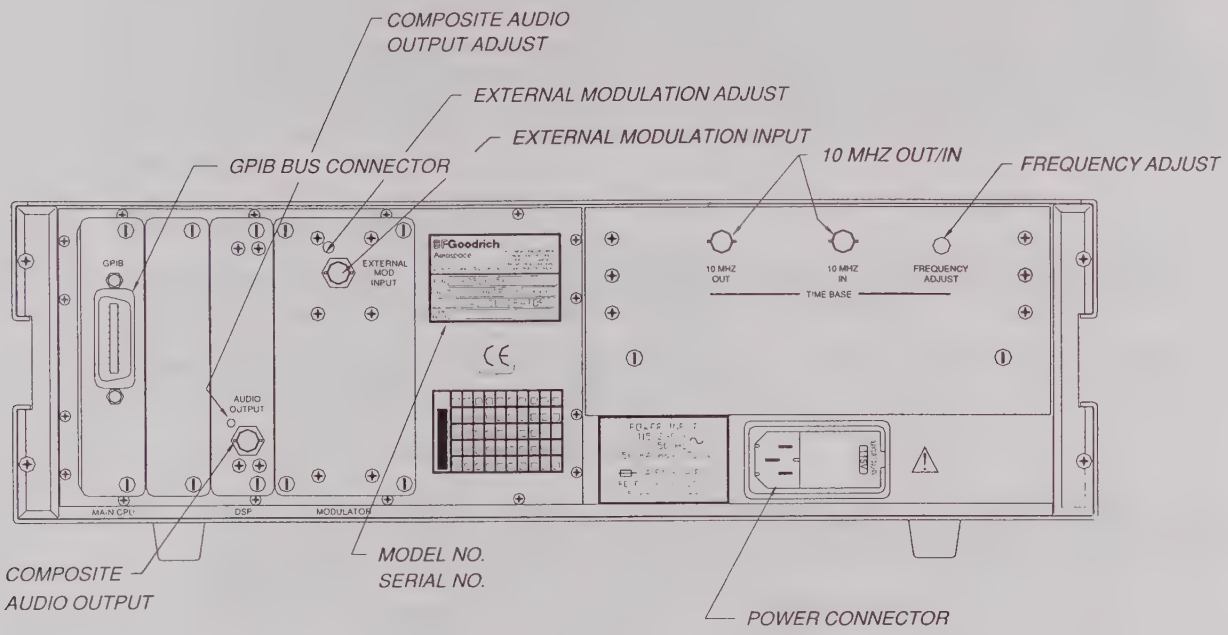

FIGURE 3-2: REAR PANEL

3.4 POWER UP PROCEDURE

Before turning on the power to the NAV 2000R, ensure that the proper mains power is applied. Configure the unit for the input voltage to be used.

To turn on the NAV 2000R, press the power button located at the bottom left corner of the front panel. Upon power up, the NAV 2000R will perform a self-test and when complete will indicate self test results on the display.

3.5 LOCAL USER INTERFACE

Local operation of the NAV 2000R consists of using the display and keypads for entry. Four groups of keypads allow control of mode, display cursor, quick entry, and numeric entry. The display is menu driven with selectable data fields on each menu page.

Parametric data is entered using front panel keypads and display. Selectable options are surrounded by "bubbles". Each bubble represents a field that the user may select and change. Located underneath each selectable field is a field identifier. Navigating the menus is discussed below.

3.5.1 NAV 2000R MODES

The NAV 2000R local operation is menu driven through the use of mode menu pages. There are six generator modes and three utility modes. Each top level generator mode menu is accessed by pressing the corresponding mode menu select key. These are aligned vertically and to the right of the display. The main generator modes are: VOR, LOCalizer (LOC), Glide Slope (G/S), ADF, MarKeR beacon (MKR) and COMmunications (COM). The utility menu can be accessed by pressing and holding any of the generator mode select keys, except for the LOC/GS key, for two seconds. Two additional modes, External Modulation Mode (EMM) and CALibration mode (CAL), are accessible from the utility menu. Also, VOR and LOC modes have alternate control modes to allow control of their audio composite output signals. These modes, VORa and LOCa, are accessed by selecting the audio control mode bubble from within their 1st page. The SELCAL mode is accessed from the SELCAL bubble in PAGE 1 of the COM mode menus.

3.5.2 MENU LAYOUT DESCRIPTION

Every display menu page can be broken into four different partitions: the Selected Mode region, the Status Line Region, the Prompt Line Region, and the Field Entry Region.

On each menu page, there are multiple fields. If more than one page is needed to access all fields of a given mode, one of the fields will be the next page field.

DISPLAY REGION: Selected Mode Display

The Mode Select region is located in the upper left-hand corner of the display. This region indicates the NAV 2000R current mode of operation. Distinguishing it from the other regions, the selected mode region is displayed using inverse video. The character assignments for each mode are:

MODE	ABBREVIATION
VOR	VOR
VOR audio control	VORa
Localizer	LOC
Localizer audio control	LOCa
Glideslope	G/S
ADF	ADF
Marker Beacon	MKR
Communication	COM
Ext. Modulation Mode	EMM
Calibration	CAL
Selective Calling	SCL

DISPLAY REGION: Status Line

The status line annunciates certain NAV 2000R status conditions by using status flags. These flags are made from grouped alphanumeric characters. In some cases the annunciation involves flashing to attract attention. The flags, and their description, are detailed in this section.

EDIT ANNUNCIATOR

The EDIT flag is annunciated whenever the user is editing a field.

VAL FLAG

The VAL flag is displayed whenever field values are set to a non-standard value, as defined by the current system mode of operation. For example, it would be set during VOR mode when the user requests an audio frequency deviating from the standard VOR frequencies.

REGXX or DEFLT FLAG

The REGXX flag is displayed whenever the user has stored or recalled a NAV 2000R setup register. For example, after the user has recalled setup #1, the status line would display the setup register flag REG01. When register # 00 is recalled, DEFLT is displayed indicating that the NAV 2000R has been set to its factory default settings.

REMOTE FLAG

This flag is set anytime a remote application program has commanded the NAV 2000R via the GPIB bus. During remote operation all front panel keyboard controls are locked out. The CLR/LCL key, the only key recognized during remote mode, will force the system back to local control.

EMS

Indicates that an audio signal applied to the EXTERNAL MOD INPUT will be summed with internal audio and applied to the AM modulator.

DISPLAY REGION: Prompt line

The prompt line region is located directly below the status line and displays special warnings or errors that may arise during editing and controlling of the NAV 2000R.

3.5.3 GETTING AROUND IN THE MENUS

All front panel user inputs to the NAV 2000R are entered through selection of menu page fields. Each mode of operation has a set of pre-defined user programmable items. These items are programmed through the menu page display fields. VOR, LOC, G/S, and ADF generator modes have multiple menu pages which provide access to all modifiable items. To access the next page, a "NEXT PAGE" menu field is provided.

To display pages of the VOR, LOC, G/S, ADF, MKR, or COM menus, the appropriate mode select key is pressed. (The mode select keypad is aligned along the right side of display). To move between different mode pages for VOR, LOC, G/S and ADF use the cursor keypad to highlight the "NEXT PAGE" field and press SEL (select).

To display the utility menu, any one of four generator mode keys [ADF] is pressed and held down for two seconds. The external modulation (EMM) mode and the calibration (CAL) mode can be entered from the utility menu by selecting the corresponding option on the menu. Pressing the number of the utility menu item will immediately select the menu option. Alternatively, the arrow keys can be used to move up and down the list until the desired item is highlighted and then the select (SEL) or enter (ENT) keys can be pressed to activate the selection. Further discussion of the Utility Menu may be found in Section 3.5.14.

To change the contents of a field, the cursor keypad is used to highlight the desired field. The user may change the data of the currently selected field in a manner which is dependent upon the type of data the field contains. There are four types of fields: Numeric, alphanumeric, discrete toggle, and next page.

3.5.4 CHANGING FIELD DATA / ALPHANUMERIC

3.5.4.1 EDITING NUMERIC OR ALPHANUMERIC FIELDS

A Numeric menu field (any field containing a numeric value) can be modified using either the cursor keys or numeric keypad. This section details the use of the cursor keys to edit a field of existing data. The cursor keys may be used to edit existing field data. To edit a field, press the SEL key while the field of interest is highlighted.

Upon pressing the SEL key when a numeric or an alphanumeric field is highlighted, the edit mode is entered and annunciated by the EDIT prompt. Within the field selected for edit is a cursor, two blinking arrows, which indicates which character location is currently being edited.

The left and right arrow keys may be used to force the cursor to the character just left or right of the current cursor position. This allows the user to alter any digit or character within the field. If the user presses a numeric keypad button while editing, the digit will automatically be placed at the current cursor location.

A character under edit may also be changed by pressing the up or down arrow keys to advance to the next character or previous character, respectively. For numeric fields, the characters can be 0-9 and for alphanumeric fields, A through Z, 0 through 9, and the space character.

When editing numeric digits using the cursor, if the digit changes from 9 to 0 then a 1 is carried to the next significant digit. When changing alphanumeric digits with the cursors, the display will scroll through the 0 through 9 digits, A through Z, and the space character before starting over at 0.

The CLR key can be pressed to restore the original value of the field being cursor edited. To terminate cursor editing, press the SEL or ENT keys.

While editing, if the value of the numeric data moves outside its standard setting, two asterisks ('*') are displayed, one on each side of the field. The NAV 2000R output signal changes immediately during editing. This enables real time skewing of numeric parameters.

If the data in the numeric field being edited is at its lower limit then further decrementing with the down arrow cursor key will have no effect and the message "VALUE LIMITED TO MINIMUM." will appear briefly on the status line. If the data in the numeric field being edited is at its upper limit then further incrementing with the up arrow cursor key will have no effect and the message "VALUE LIMITED TO MAXIMUM." will appear briefly on the status line.

NOTE:

Numeric entry starts to the right side of the field and works left. However, alphanumeric entry starts to the left and works right.

3.5.4.2 ENTERING NUMERIC FIELD VALUES WITH THE KEYPAD

Numeric field values can be entered directly using the numeric keypad. To modify a numeric field with the numeric keypad the field is first selected using the cursor keys. The entry begins with a depression of the numeric keypad digit. The previous numeric field value will blank and the new numeric digit, the one which caused the edit entry, will be placed right justified. Each successive numeric key pressed will shift left and append the new key to the right-most character position. This append shifting will be allowed to continue for the full field width. If the user tries to enter more digits than will fit within the field, the leftmost character will be truncated.

Pressing the ENT (enter) key terminates the number entry. The CLR (clear) key erases the field allowing a number to be reentered. The arrow and edit keys will be ignored during numeric keypad entry. If the user presses the ENT key when the field is cleared of all numeric data, the field is restored to the value prior to edit mode entry. After the enter key is pressed, the system terminates edit mode.

After entering a numeric value, if the value of the numeric data moves outside its standard setting, two asterisks ('*') are displayed, one on each side of the field.

If the data entered into the numeric field is less than the minimum acceptable lower limit, the field will be set to its lower limit and the message "VALUE LIMITED TO MINIMUM." will appear briefly on the status line. If the data entered into the numeric field is greater than the maximum acceptable upper limit, the field will be set to its upper limit and the message "VALUE LIMITED TO MAXIMUM." will appear briefly on the status line.

3.5.4.3 TOGGLE FIELD EDITING

With toggle field editing, the field data toggles between items in a list. The list will be two or more items. To change a toggle field, the desired field is first highlighted using the cursor keypad. Then, the field contents are changed when the SEL (select) key is pressed. Items can be toggled by pressing the select key successively. The list toggles circularly so when the end of the list is reached, the first item will again be displayed.

The numeric keys of the numeric keypad have no function during toggle editing.

3.5.4.4 USING HOT KEYS

"HOT KEYS" provide a quick method to modify bearing or DDM to a standard setting. The keys are only recognized during VOR, LOC and G/S modes.

During the VOR mode, the hot keys allow the user to step through standard bearing check points without having to edit the bearing field. Anytime the VOR mode is selected, the user may press any degree key to automatically set the bearing field contents. Twelve different bearing settings are provided, these are: 0, 30, 60, 90, 120, 150, 180, 210, 240, 270, 300, and 330 degrees.

If LOC or G/S is the current mode, pressing one of the hot keys will automatically set the DDM to a preset value. The standard DDM keys for G/S are .000, .045, .091, .175, and .400. The standard DDM keys for LOC are .000, .046, .093, .155, and .200. If a DDM hot key is pressed which is not a standard DDM for the current mode the DDM value will be accepted but the message "NON-STANDARD DDM VALUE" will appear.

Pressing the 90 Hz or 150 Hz hot keys will toggle the indicated tone off or on.

3.5.4.5 RF LEVEL ENTRY

Most all of the modes have an RF level control bubble associated with them. This field allows the RF level to be programmed. The RF level may be programmed with 1/10th dBm resolution using either dBm or uV/mV units. DBm numbers are entered using the ENT key. Microvolts and millivolt numbers may be entered using the uV and mV keys (STO/RCL) respectively. The default displayed units (normally dBm) may be changed by pressing the SEL key and then pressing either the uV, mV, or dBm keys. The RF level field is "global" to the other modes which control RF level. That is, if the RF level is changed in one mode, it is changed for all the other modes alike.

3.5.5 VOR MODE FIELD DEFINITIONS

VOR test mode is entered by pressing and releasing the VOR mode button. This mode is used to test and align VOR receivers. The VOR mode parameter fields are described in this section.

PAGE 1:

RF LEVEL

This field allows the RF level to be programmed. The RF level may be programmed with 1/10th dBm resolution using either dBm or uV/mV units. DBm numbers are entered using the ENT key. Microvolts and millivolt numbers may be entered using the uV and mV keys (STO/RCL) respectively. The default displayed units (normally dBm) may be changed by pressing the SEL key and then pressing either the uV, mV, or dBm keys.

BEARING

The desired omni bearing is programmed from 0 to 359.99 degrees in 0.01 degree steps. The default bearing is 0 degrees.

TO/FROM

This field specifies whether the bearing reference is TO or FROM. This field is a discrete toggle type field and the default reference is set to 'FROM'.

FREQ. MHz

This field allows the RF frequency to be programmed. The RF frequency may be programmed in 0.00001 MHz steps within the NAV 2000R frequency range of 0.15000 MHz to 450.00000 MHz.

CHANNEL

This field steps the RF frequency output up and down in 50 KHz steps using the cursor control up and down arrow keys.

TOTAL %MOD

This field allows changing all the percent modulation fields respective to one another. That is, changing the total percent modulation will allow all current modulations to be changed equally, maintaining the ratios between one another. For example, suppose the 30 Hz modulation is set to 30%, 9960 Hz modulation is set to 20%, and the ident tone 1020 Hz modulation is set to 10%. This indicates a total sum of 60%. If the total percent modulation was changed from 60% to 30%, the new component percent modulations would be 15%, 10%, and 5% respectively.

AUDIO

Selecting the audio control mode field places the NAV 2000R into VOR audio control mode. The audio control mode, designated as the "VORa" mode, commands the NAV 2000R to allow the VOR audio composite output to be varied. Within this mode, RF control is not allowed and the RF attenuator is fixed for a minimum output level of -127 dBm. Also, no identification coding is allowed. The alternate VOR mode of operation will continue until the VOR button is pushed while the VORa control page is selected.

PAGE 2:

30 Hz FREQUENCY

Programs the 30 Hz frequency. The user may specify a frequency from within the 24.0 Hz to 36.0 Hz range, with a resolution of 0.1 Hz. Any frequency, other than the default setting of 30.0 Hz, will cause the VAL flag to be annunciated.

30 Hz %MOD

Programs the desired 30 Hz tone percent of modulation. This is a numeric field type and is programmable from 0 to 99% in 0.01% steps. The default for this field is 30%. The "VALUE LIMITED TO MAXIMUM" error will be displayed if the user tries to enter a 30 Hz percent modulation value causing the total modulation to be more than 99% modulation. In this case, the system limits the 30 Hz modulation field to a value that forces all modulation percents to total 99%.

9960 Hz FREQUENCY

Programs the 9960 Hz center frequency. The user may specify a frequency from within the 7968.0 Hz to 11952.0 Hz range, with a resolution of 0.1 Hz. Any frequency, other than the default setting of 9.960 KHz, will cause the VAL flag to annunciate.

9960 Hz %MOD

Programs the desired 9960 Hz tone percent of modulation. This is a numeric field type and is programmable from 0 to 99% in 0.01% steps. The default for this field is 30%. The "VALUE LIMITED TO MAXIMUM" error will be displayed if the user tries to enter a 9960 Hz percent modulation value causing the total modulation to be more than 99% modulation. In this case, the system limits the 9960 Hz modulation field to a value that forces all modulation percents to total 99%.

1020 Hz FREQUENCY

Programs the 1020 Hz frequency. The user may specify a frequency from 10.0 Hz to 18000.0 Hz with 0.1 Hz step resolution. Any frequency, other than the default setting of 1020.0 Hz, will cause the VAL flag to annunciate.

1020 Hz %MOD

Programs the desired 1020 Hz tone percent of modulation. This is a numeric field type and is programmable from 0 to 99% in 0.01% steps. The "VALUE LIMITED TO MAXIMUM" error will be displayed if the user tries to enter a 1020 Hz percent modulation value greater than 99% or a modulation value causing the total modulation to be more than 99% modulation. In this case, the system will limit the 1020 Hz modulation to a value that causes all modulation percents to total 99%.

IDENT MODE

Allows the user to specify how the identification tone is to be modulated. This is a toggle type field containing three valid options: OFF, CODE, and TONE. A selection of OFF, the default setting, commands the NAV 2000R to force the percent of modulation to 0%. A selection of CODE, causes the NAV 2000R to Morse code modulate using the specified identification string. A selection of TONE, commands the NAV 2000R to modulate a steady tone.

PAGE 3:

IDENT CODE

The identification field contains the identification string transmitted. The field uses the alphanumeric field entry method. The characters allowed in the string are 0-9, or A-Z. The maximum number of characters allowed is six. The default for this field is the ASCII string "JcAir". The "space" character may be entered either at the beginning or end to allow entry of character strings shorter than six.

WORD RATE

Allows the programming of the repetition rate at which the Morse Code identifier is transmitted. The valid range for the field is from 1 to 65 seconds programmable with 0.1 second step resolution. The default setting is 30 seconds.

DOT TIME

Allows programming of the Morse code dot time in milliseconds. The valid range is from 50 ms to 250 ms with 1 ms resolution steps. The default value is 150 ms.

DASH TIME

Allows programming of the Morse code dash time in milliseconds. The valid range is from 150 ms to 750 ms with 1 ms resolution steps. The default setting is 450 ms.

SPACING DOT/DASH

Programs delay time between dots and dashes within Morse code characters. The valid range is from 50 ms to 250 ms with 1 ms resolution steps. The default setting is 150 ms.

SPACING CHARACTER

Programs delay time between Morse code characters. The valid range is from 50 ms to 250 ms with 1 ms resolution steps. The default setting is 450 ms.

3.5.6 VOR AUDIO CONTROL MODE (VORa) FIELD DEFINITION

The VOR audio control mode, VORa, is entered by pressing and releasing the SEL key while the AUDIO control mode field, on VOR page 1, is selected. This mode allows the user to specify the NAV 2000R audio output signal level using volts RMS. No RF level control is allowed while within this mode of operation.

COMPOSITE AUDIO CONTROL:

AUDIO LEVEL

This field allows the audio signal level to be changed. The value entered represents Vrms of the VOR composite signal with both 30 Hz and 9960 Hz signals selected on.

BEARING

The desired omni bearing is programmed from 0 to 359.99 degrees in 0.01 degree steps. The default bearing is 0 degrees.

TO/FROM

Specifies whether the bearing reference is TO or FROM. This field is a discrete toggle type field and the default reference is set to 'FROM'.

30 Hz MOD

Specifies whether the 30 Hz signal is to be modulated. The field toggles between ON and OFF whenever the SEL key is pressed while the field is selected.

9960 Hz MOD

Specifies whether the 9960 Hz signal is to be modulated. The field toggles between ON and OFF whenever the SEL key is pressed while the field is selected.

3.5.7 LOCALIZER MODE FIELD DEFINITION

Localizer test mode is entered by pressing and releasing the LOC mode select button. This mode is used to test and align the Localizer portion of ILS equipment.

PAGE 1:

RF LEVEL

This field allows the RF level to be programmed. The RF level may be programmed with 1/10th dBm resolution using either dBm or uV/mV units. DBm numbers are entered using the ENT key. Microvolts and millivolt numbers may be entered using the uV and mV keys (STO/RCL) respectively. The default displayed units (normally dBm) may be changed by pressing the SEL key and then pressing either the uV, mV, or dBm keys.

DDM

Programs the %MOD of the 90 and 150 Hz tones. The valid entry range for this field is from .000 to .400 DDM (Difference in Depth of Modulation) with .001 resolution. The NAV 2000R computes the percent of modulation ratio between the 90 and 150 Hz required to produce the commanded DDM. The percent of modulation of each tone will be set to the proper ratio forcing both tones to total the standard modulation of 40%. The default value for this field is .000 DDM, 20% modulation for each tone.

When a valid Localizer DDM "hot" key is pressed, the DDM will automatically be accepted. If a G/S DDM "hot" key is pressed, the system will accept it and will display, momentarily on the prompt line, the warning message: "NON-STANDARD DDM VALUE". Pressing the 90 or 150 Hz "hot" key will alternately shut off or turn on that tone to allow quick testing of a drop out of either tone at preset DDMs.

LEFT/RIGHT

Specifies whether the Localizer reference is either LEFT/150 or RIGHT/90. When this toggle type field is selected, the current 90 and 150 Hz %MOD data fields are switched. The default value is LEFT/150.

FREQ. MHz

This field allows the RF frequency to be programmed. The RF frequency may be programmed in 0.00001 MHz steps within the NAV 2000R frequency range of .15 MHz to 450 MHz.

CHANNEL

This field steps the RF frequency output up and down in 50 kHz steps using the cursor control up and down arrow keys.

TOTAL %MOD

This field allows changing all the percent modulation fields respective to one another. That is, changing the total percent modulation will allow all current modulations to be changed equally, maintaining the ratios between one another.

AUDIO

Selecting the audio control mode field alters the NAV 2000R's Localizer mode of operation. The audio control mode, designated as the "LOCa" mode, commands the NAV 2000R to allow the Localizer audio composite output to be varied. Within this mode, RF control is not allowed and the RF attenuator is fixed for a minimum RF output level of -127 dBm. Also, no identification coding is allowed. The alternate LOC mode of operation will continue until the LOC button is pushed while the LOCa control page is selected.

PAGE 2:

90 Hz FREQUENCY

Programs the 90 Hz frequency. A frequency from 72.0 Hz to 108.0 Hz in 0.1 Hz step may be entered. Any frequency, other than the default setting of 90.0 Hz, will cause the VAL flag to annunciate.

90 Hz %MOD

Programs the modulation percentage of 90 Hz tone. This is a numeric field type and is programmable from 0 to 99% in 0.01% steps. The default for this field is 20%. The "VALUE LIMITED TO MAXIMUM" error is displayed if a 90 Hz modulation percentage causes the total modulation percentage, the sum of percent modulation of the 90 Hz, 150 Hz, and the ident tone, to exceed 99%. In this case, the system limits the 90 Hz modulation percentage to a value that forces all modulation percents to total 99%.

A current value for the DDM field will be computed and the field will be updated for the newly entered 90 Hz percent modulation data. If the sum of the 90 and 150 Hz percent modulation fields does not add to 40, the DDM field will display --- in the field and the modulation fields will be highlighted by an * on both sides.

150 Hz FREQUENCY

Programs the 150 Hz frequency. A frequency from 120.0 Hz to 180.0 Hz in 0.1 Hz steps may be entered. Any frequency, other than the default setting of 150.0 Hz, will cause the VAL flag to annunciate.

150 Hz %MOD

Programs the modulation percentage for 150 Hz tone. This is a numeric field type and is programmable from 0 to 99% in 0.01% steps. The default for this field is 20%. The "VALUE LIMITED TO MAXIMUM" error will be displayed if the 150 Hz modulation percentage is set to a value which causes the total modulation to be more than 99%. In this case, the system limits the 150 Hz modulation field to a value that forces all modulation percents to total 99%.

A current value for the DDM field will be computed and the field will be updated for a newly entered 150 Hz percent modulation data. If the computed DDM exceeds .400, the DDM field will display --- in the field. Also, the LEFT/RIGHT field will be changed to reflect a newly entered percent of modulation field.

1020 Hz FREQUENCY

Programs the 1020 Hz frequency. A frequency from 10.0 Hz to 18000.0 Hz in 0.1 Hz steps may be entered. Any frequency, other than the default setting of 1020.0 Hz, will cause the VAL flag to annunciate.

1020 Hz %MOD

Programs the 1020 Hz tone modulation percentage. This is a numeric field type and is programmable from 0 to 99% in 0.01% steps. An entry of 0% modulation commands the NAV 2000R not to modulate the ident tone. The VAL flag will be set when any value, other than the default value of 20%, is entered.

The "VALUE LIMITED TO MAXIMUM" error will be displayed if a 1020 Hz modulation percentage causes the total modulation to be more than 99%. In this case, the system will limit the 1020 Hz modulation to a value that causes all modulation percents to total 99%. If a 90 or 150 Hz modulation percentage causes the total modulation percentage to exceed 99%, the system will adjust the desired 1020 Hz modulation percentage to realize a total modulation percentage of 99%.

PHASE SHIFT

Allows alteration of the phase between the 90 Hz and 150 Hz tones. The phase may be specified ranging from 0 to 359.99 degrees in 0.01 degree steps. Any phase shift value, other than the default setting of 0 degrees, will cause the VAL flag to annunciate.

IDENT MODE

The ident mode field selects the identification tone modulation method. This is a toggle field containing three valid options: OFF, CODE, and TONE. A selection of OFF, the default setting, commands the unit to force the percent of modulation to 0%. Selecting CODE, causes the unit to Morse code modulate the specified identification string. And a selection of TONE, commands the NAV 2000R to modulate a 1020 Hz tone.

PAGE 3:

IDENT CODE

Allows modification to the identification string transmitted. The field uses the alphanumeric field entry. The characters allowed in the string are 0-9, A-Z, and the space. Characters lengths of 1 to 6 are allowed. The default for this field is the string "JcAir".

WORD RATE

Allows programming of the repetition rate at which the Morse Code identifier is transmitted. The valid range for the field is from 1 to 65 seconds programmable in 0.1 second steps. The default setting is 30 seconds.

DOT TIME

Allows programming of Morse code dot time in milliseconds. The valid range is from 50 ms to 250 ms in 1 ms steps. The default value is 150 ms.

DASH TIME

Allows programming of Morse code dash time in milliseconds. The valid range is from 150 ms to 750 ms in 1 ms steps. The default setting is 450 ms.

SPACING DOT/DASH

Allows programming of delay time between Morse code dots and dashes. The valid range is from 150 ms to 750 ms in 1 ms steps. The default setting is 450 ms.

SPACING CHARACTER

Allows programming of delay time between Morse code characters. The valid range is from 50 ms to 250 ms in 1 ms steps. The default setting is 150 ms.

3.5.8 LOC AUDIO CONTROL MODE (LOCa) FIELD DEFINITION

The Localizer audio control mode, LOCa, is entered by pressing and releasing the SEL key while the AUDIO control mode field, LOC page 1, is selected. This mode allows the user to specify the NAV 2000R audio output signal level using volts RMS. No RF level control is allowed while within this mode of control.

COMPOSITE AUDIO CONTROL:

AUDIO LEVEL

This field allows the audio signal level to be changed. The value entered represents Vrms of the Localizer composite signal with both 90 and 150 Hz signals selected on, and a DDM setting of 0 DDM.

DDM

Programs the modulation percentage of the 90 and 150 Hz tones. The valid entry range for this field is from .000 to .400 DDM (Difference in Depth of Modulation) in .001 steps. The NAV 2000R computes the percent of modulation ratio between the 90 and 150 Hz tones required to produce the commanded DDM.

When a valid Localizer DDM "hot" key is pressed the DDM will automatically be accepted. If a G/S DDM "hot" key is pressed, the system will accept it and will display, momentarily on the prompt line, the warning message: "NON-STANDARD DDM VALUE". Pressing the 90 or 150 Hz "hot" key will alternately shut off or turn on that tone to allow quick testing of a drop out of either tone at preset DDMs.

LEFT/RIGHT

Specifies whether the Localizer reference is either LEFT/150 or RIGHT/90. When this toggle type field is selected, the current 90 and 150 Hz modulation percent data fields are switched. The default value is LEFT/150.

90 Hz MOD

Specifies whether the 90 Hz signal is to be modulated. The field toggles between ON and OFF whenever the SEL key is pressed while the field is selected. The 90 Hz hot key will also toggle the current 90 Hz modulation state.

150 Hz MOD

Specifies whether the 150 Hz signal is to be modulated. The field toggles between ON and OFF whenever the SEL key is pressed while the field is selected. The 150 Hz hot key will also toggle the current 150 Hz modulation state.

3.5.9 GLIDESLOPE MODE FIELD DEFINITION

Glideslope test mode is entered by pressing and releasing the LOC/GS mode select button. This mode is used to test and align the Glideslope portion of ILS equipment.

PAGE 1:

RF LEVEL

This field allows the RF level to be programmed. The RF level may be programmed with 1/10th dBm resolution using either dBm or uV/mV units. DBm numbers are entered using the ENT key. Microvolts and millivolt numbers may be entered using the uV and mV keys (STO/RCL) respectively. The default displayed units (normally dBm) may be changed by pressing the SEL key and then pressing either the uV, mV, or dBm keys.

DDM

Programs the modulation percentage of the 90 and 150 Hz tones. The valid range for this field is from .000 to .800 DDM in .001 steps. The NAV 2000R computes the percent of modulation ratio between the 90 and 150 Hz tones required to produce the commanded DDM. The modulation percentage of each tone will be set to the proper ratio and with both tones totaling the standard modulation of 80%. The default value for this field is .000 DDM, 40% modulation each.

Valid Glideslope DDM "HOT" keys will automatically set the DDM value in the DDM field. This is true even if the DDM field is not currently selected. If an invalid Glideslope DDM hot key is pressed, the system will display, momentarily on the prompt line, the warning message; "NON-STANDARD DDM VALUE".

UP/DOWN

Specifies whether the Glideslope reference is either UP/150 or DOWN/90. This is a discrete toggle field type and the default setting is UP/150.

FREQ. MHz

This field allows the RF frequency to be programmed. The RF frequency may be programmed in 0.00001 MHz steps within the NAV 2000R frequency range of 0.15 MHz to 450 MHz.

ILS PAIR

An alternative field is selected by means of the +/- (ILS) button, while the FREQ. MHz field is highlighted. This field allows the paired ILS frequency to be used to change the actual Glideslope frequency being generated. With the ILS PAIR window displayed, only paired frequencies of 108.1 to 111.95 pre-assigned for ILS operation may be selected. A listing of these pre-assigned frequencies may be displayed by pressing the RCL button followed by the LOC/GS button. The ENT button will return the user to the previous display. Pressing the SEL button with the ILS PAIR field highlighted will cause the CHANNEL field to be selected. The up and down arrow keys will then cause the ILS PAIR frequency selection to step through pre-assigned ILS frequency pairing.

CHANNEL

This field steps the RF frequency output up and down by using the cursor control up and down arrow keys. With FREQ MHz window displayed, the output frequency will "STEP" up or down as selected by 150 KHz steps. With ILS PAIR window displayed, the output frequency will step up or down through the pre-assigned ILS paired frequency.

TOTAL %MOD

This field allows changing all the percent modulation fields respective to one another. That is, changing the total percent modulation will allow all current modulations to be changed equally, maintaining the ratios between one another.

PAGE 2:

90 Hz FREQ

This field programs the 90 Hz frequency. A frequency from 72.0 Hz to 108.0 Hz in 0.1 Hz steps may be entered. Any frequency other than the default setting of 90.0 Hz will cause the VAL flag to annunciate.

90 Hz %MOD

This field programs the modulation percentage of the 90 Hz tone. This is a numeric field type and is programmable from 0 to 99% in 0.01% steps. The default for this field is 40%. The "VALUE LIMITED TO MAXIMUM" error will be displayed if the entered 90 Hz modulation percentage causes the total modulation to be more than 99%. In this case, the system limits the 90 Hz modulation percentage such that total modulation percentage is 99%.

A current value for the DDM field will be computed and the field will be updated for a newly entered 90 Hz modulation percentage. If the computed DDM exceeds .800, the DDM field displays --- in the field. Also, the UP/DOWN field will be changed to reflect the newly entered modulation percentage.

150 Hz FREQ

This field programs the 150 Hz frequency. A frequency from 120.0 Hz to 180.0 Hz in 0.1 Hz steps may be entered. Any frequency other than the default setting of 150.0 Hz will cause the VAL flag to annunciate.

150 Hz %MOD

This field programs the desired percent of modulation of the 150 Hz tone. This is a numeric field type and is programmable from 0 to 99% in 0.01% steps. The default for this field is 40%. The "VALUE LIMITED TO MAXIMUM" error will be displayed if the entered 150 Hz modulation percentage causes the total modulation to exceed 99%. In this case, the system limits the 150 Hz modulation percentage so that the total modulation percentage is 99%.

A current value for the DDM field will be computed and the field will be updated for a newly entered 150 Hz modulation percentage. If the computed DDM exceeds .800, the DDM field will display --- in the field. Also, the UP/DOWN field will be changed to reflect the newly entered modulation percentage.

PHASE SHIFT

Alters the phase between 90 and 150 Hz tones. A phase may be specified ranging from 0 to 359.99 degrees in 0.01 degree steps. Any phase shift value other than the default setting of 0 degrees will cause the VAL flag to annunciate.

3.5.10 ADF MODE FIELD DEFINITIONS

ADF test mode is entered by pressing and releasing the ADF mode button. This mode is used to test and align ADF receivers. The ADF mode parameter fields are described in this section.

PAGE 1:

RF LEVEL

This field allows the RF level to be programmed. The RF level may be programmed with 1/10th dBm resolution using either dBm or uV/mV units. DBm numbers are entered using the ENT key. Microvolt and millivolt numbers are entered using the uV and mV keys (STO/RCL) respectively. The default displayed units (normally dBm) may be changed by pressing the SEL key and then pressing either the uV, mV or dBm keys.

FREQ. MHz

This field allows the RF frequency to be programmed. The RF frequency may be programmed in 0.00001 MHz steps within the NAV 2000R frequency range of 0.15000 MHz to 450.00000 MHz.

CHANNEL

This field steps the RF frequency output up and down in 500 Hz steps using the cursor control up and down arrow keys.

TOTAL %MOD

This field allows changing all the percent modulation fields respective to one another. That is, changing the total percent modulation will allow all current modulations to be changed equally, maintaining the ratios between one another. For example, suppose the 30 Hz modulation is set to 30%, 9960 Hz modulation is set to 20% and the ident tone 1000 Hz modulation is set to 10%. This indicates a total sum of 60%. If the total percent modulation was changed from 60% to 30%, the new component percent modulations would be 15%, 10% and 5% respectively.

TONE FREQ.

Programs the 1000 Hz frequency. The user may specify a frequency from 10.0 Hz 10 18000.0 Hz with 0.1 Hz step resolution.

MODULATION

Programs the desired 1000 Hz tone percent of modulation. This is a numeric field type and is programmable from 0 to 99% in 0.01% steps. The "VALUE LIMITED TO MAXIMUM" error will be displayed if the user tries to enter a percent modulation value greater than 99%.

IDENT MODE

Allows the user to specify how the identification tone is to be modulated. This is a toggle type field containing three valid options: OFF, CODE and TONE. A selection of OFF, the default setting, commands the NAV 2000R to force the percent of modulation to 0%. A selection of CODE, causes the NAV 2000R to generate the specified Morse Code identification string using audio ON/OFF keying. A selection of TONE, commands the NAV 2000R to modulate a steady tone.

PAGE 2:

IDENT CODE

The identification field contains the identification string transmitted. The field uses the alphanumeric field entry method. The characters allowed in the string are 0-9 or A-Z. The maximum number of characters allowed is six. The default for this field is the ASCII string "JcAir". The "space" character may be entered either at the beginning or end to allow entry of character strings shorter than six.

WORD RATE

Allows the programming of the repetition rate at which the Morse Code identifier is transmitted. The valid range for the field is from 1 to 65 seconds programmable with 0.1 second step resolution. The default setting is 30 seconds.

DOT TIME

Allows programming of the Morse Code dot time in milliseconds. The valid range is from 50 ms to 250 ms with 1ms resolution. The default value is 150 ms.

DASH TIME

Allows programming of the Morse Code dash time in milliseconds. The valid range is from 150 ms to 750 ms with 1ms resolution. The default setting is 450 ms.

SPACING DOT/DASH

Programs delay time between dots and dashes within Morse Code characters. The valid range is from 50 ms to 250 ms with 1 ms resolution. The default setting is 150 ms.

SPACING CHARACTER

Programs delay time between Morse Code characters. The valid range is from 150 ms to 750 ms with 1 ms resolution. The default setting is 450 ms.

3.5.11 MARKER BEACON MODE FIELD DEFINITION

The Marker Beacon mode is entered by pressing and releasing the MKR mode select button. This mode is used to test and align Marker Beacon equipment by modulating one user specified tone and simulating one of three Marker Beacons: inner, middle, or outer. The user may change the frequency and modulation and also may specify either a constant or pulsed mode of modulation. If the user selects CODE, the system will pulse the Marker Beacon modulation, on and off, at a rate defined by the beacon selected.

RF LEVEL

This field allows the RF level to be programmed. The RF level may be programmed with 1/10th dBm resolution using either dBm or uV/mV units. DBm numbers are entered using the ENT key. Microvolts and millivolt numbers may be entered using the uV and mV keys (STO/RCL) respectively. The default displayed units (normally dBm) may be changed by pressing the SEL key and then pressing either the uV, mV, or dBm keys.

TONE FREQ.

This field sets the Marker Beacon modulation frequency and allows changes to valid entry ranges within each of the three Beacon simulations. The Beacon frequency range may be reprogrammed to any value ranging from 10.0 Hz to 18000.0 Hz in 0.1 Hz steps. The outer Beacon frequency default setting is 400 Hz, middle Beacon 1300 Hz., and the inner Beacon is 3000 Hz. Any frequency, other than the Marker Beacon's default setting, will cause the VAL flag to annunciate.

BEACON MODE

This field specifies which Marker Beacon type to simulate and is a discrete toggle type field with three available selections: OUTER, MIDDLE, and INNER. The default for this value is OUTER.

FREQ. MHz

This field allows the RF frequency to be programmed.

MODULATION

This field programs Marker Beacon modulation percentage. Only one Marker Beacon frequency is modulated at a time. This is a numeric field type and is programmable from 0 to 99.0% in 0.01% steps.

IDENT MODE

This toggle menu selects the Marker Beacon modulation technique: OFF, TONE, CODE. When the default option of CODE is selected, the NAV 2000R will pulse the modulation on and off at a rate as defined by the Beacon selected. If TONE is selected, the NAV 2000R will modulate a constant marker beacon tone. If OFF is selected, the tone will not be modulated.

3.5.12 COMMUNICATION MODE FIELD DEFINITION

The Communication mode is entered by pressing and releasing the COM mode button. This mode allows testing of communication equipment by modulating one or two tones simultaneously. The user may specify the frequency and modulation percentage of both tones. The sum of the tones is limited to 99% modulation.

RF LEVEL

This field allows the RF level to be programmed. The RF level may be programmed with 1/10th dBm resolution using either dBm or uV/mV units. DBm numbers are entered using the ENT key. Microvolts and millivolt numbers may be entered using the uV and mV keys (STO/RCL) respectively. The default displayed units (normally dBm) may be changed by pressing the SEL key and then pressing either the uV, mV, or dBm keys.

FREQ. MHz

This field allows the RF frequency to be programmed.

CHANNEL

This field steps the RF frequency output up and down by using the cursor control up and down arrow keys.

TONE #1 FREQUENCY

This field is used to program the first tone frequency from 10.0 Hz to 18000.0 Hz in 0.1 Hz steps. The default for this field is 1000 Hz.

TONE #1 MODULATION

This field programs the modulation percentage of the first tone. This is a numeric entry field type and is programmable from 0 to 99% in 0.01% steps. The default value for this field is 30%. The sum of the modulated tones will be limited to be no more than 99%.

TONE #2 FREQUENCY

This field is used to program the second tone frequency from 10.0 Hz to 18000.0 Hz in 0.1 Hz steps. The default for this field is 2000 Hz.

TONE #2 MODULATION

This field programs the modulation percentage for the second tone. This is a numeric entry field type and is programmable from 0 to 99% in 0.01% steps. The default setting is 0% modulation. The sum of the modulated tones will be limited to be no more than 99%.

TOTAL %MOD

This field allows changing all the percent modulation fields respective to one another. That is, changing the total percent modulation will allow all current modulations to be changed equally, maintaining the ratios between one another.

SELECT

Selecting the SELECT mode field places the NAV 2000R into the SELCAL mode of operation. The SELCAL mode menus are described in Section 3.5.13.

3.5.13 SELCAL MODE

The SELCAL mode allows the NAV 2000R to output the signals necessary to test SELECTIVE CALLING. The SELCAL mode menus allow programming of the RF and audio signals.

PAGE 1:

RF LEVEL

This field allows the RF level to be programmed. The RF level may be programmed with 1/10th dBm resolution using either dBm or uV/mV units. DBm numbers are entered using the ENT key. Microvolts and millivolt numbers may be entered using the uV and mV keys (STO/RCL) respectively. The default displayed units (normally dBm) may be changed by pressing the SEL key and then pressing either the uV, mV, or dBm keys.

FREQ. MHz

This field allows the RF frequency to be programmed.

CHANNEL

This field steps the RF frequency output up and down by using the cursor control up and down arrow keys.

RF KEY

This toggle field allows the RF frequency to be turned "ON" or "OFF". When the RF Key is set to "ON", the Selective Calling sequence is initiated and the Carrier remains on after the SELCAL transmission has been completed. When the RF Key is set to "OFF" the INITIATE "ACTIVE/INACTIVE" field is used to initiate the SELCAL sequence and the Carrier is turned off after the SELCAL transmission has been completed.

PULSE MOD

This field programs the modulation percentage for the pulse tones. This is a numeric entry field type and is programmable from 0 to 99% in 0.01% steps. The default setting is 0% modulation. The sum of the modulated tones will be limited to be no more than 99%.

INITIATE

This toggle field allows the SELCAL mode to be made "ACTIVE" or "INACTIVE". When this selection is made ACTIVE, the Selective Calling sequence is initiated. When the RF KEY field is OFF, turning this selection to the ACTIVE state causes the RF output to RISE to the selected preset level, the SELCAL tone pairs to be sent, and then the RF OUTPUT to RETURN OFF. Activation of the INITIATE FIELD, with RF ON simply causes the SELCAL tone pairs to be sent and the RF OUTPUT (carrier) remains at the preset level.

TONE DIFF

This field programs the tone amplitude difference of Pulse #1 to Pulse #2. This is a numeric entry field type and is programmable from -40 to +40 dB in 1 dB steps. The default setting is 0 dB.

PAGE 2:

PULSE #1 CODE

Allows modification to the PULSE #1 TONE #1 and TONE #2 frequencies. The field uses the alphanumeric field entry. The two characters in the field must fall within the range A-S. The default for this field is the string "AB". These characters correspond to the frequency displayed in the PULSE #1 TONE #1 and PULSE #1 TONE #2 bubbles.

PULSE #1 TONE #1

This field is used to program the first tone frequency, in PULSE #1. The frequency shown here corresponds to the code entered into the PULSE #1 CODE bubble (first character). This numeric data field may be edited to produce non-standard frequencies.

PULSE #1 TONE #2

This field is used to program the second tone frequency, in PULSE #1. The frequency shown here corresponds to the code entered into the PULSE #1 CODE bubble (second character). This numeric data field may be edited to produce non-standard frequencies.

PULSE #2 CODE

Allows modification to the PULSE #2 TONE #1 and TONE #2 frequencies. The field uses the alphanumeric field entry. The two characters in the field must fall within the range A-S. The default for this field is the string "CD". These characters correspond to the frequency displayed in the PULSE #2 TONE #1 and PULSE #2 TONE #2 bubbles.

PULSE #2 TONE #1

This field is used to program the first tone frequency, in PULSE #2. The frequency shown here corresponds to the code entered into the PULSE #2 CODE bubble (first character). This numeric data field may be edited to produce non-standard frequencies.

PULSE #2 TONE #2

This field is used to program the second tone frequency, in PULSE #2. The frequency shown here corresponds to the code entered into the PULSE #2 CODE bubble (second character). This numeric data field may be edited to produce non-standard frequencies.

COM TEST TONE FREQUENCY

This field is used to program the COMM test tone frequency from 10.0 Hz to 18000.0 Hz in 0.1 Hz steps. The default for this field is 1000 Hz.

COM TEST TONE MODULATION

This field programs the modulation percentage of the COM test tone. This is a numeric entry field type and is programmable from 0 to 99% in 0.01% steps. The default for this field is 30%.

PAGE 3:

PULSE #1 TIME

Allows programming the width of PULSE #1. The valid range is from 0 to 2 seconds in 1 ms steps. The default for this field is 1 Second.

GAP TIME

Allows programming the gap between PULSE #1 and PULSE #2. The valid range is from 0 ms to 999 ms in 1 ms steps. The default for this field is 500 ms.

PULSE #2 TIME

Allows programming the width of PULSE #2. The valid range is from 0 to 2 seconds in 1 ms steps. The default for this field is 1 Second.

3.5.14 UTILITY MENU

The utility menu allows access to 7 utilities which are listed below. Note that option 2, SELECT EXT. MODULATION MODE, and option 4, SELECT CALIBRATION MODE, provide access to two additional operational modes. The EMM mode is described in Section 3.5.15 and the CAL mode in Section 3.5.16. The utility menu options are discussed in this section.

0 | EXIT UTILITY MENU
1 | DISPLAY/MODIFY GPIB ADDRESS
2 | SELECT EXT. MODULATION MODE
3 | SET EXT. MOD. RELAY (On/Off)
4 | SELECT CALIBRATION MODE
5 | DISPLAY SYSTEM STATUS
6 | EXECUTE DISPLAY TEST
7 | SET ALL REGISTERS TO DEFAULT

EXIT UTILITY MENU

Selecting this Utility menu option returns the NAV 2000R to the mode which was the current mode upon entry into the Utility menu.

DISPLAY/MODIFY GPIB ADDRESS

This option permits the user to display and modify the current NAV 2000R GPIB address. The address field specifies the desired GPIB address of the NAV 2000R for talk and listen. This is the address the NAV 2000R responds to during a host computer call for talk or listen bus transactions. This field is a numeric data type and has a valid range from 0 to 31. The default address value is 20.

SELECT EXT. MODULATION MODE

This option enables external modulation. The external modulation is applied to the RF module external modulation input. When external modulation is selected, all internal modulation is removed. External Modulation Mode is discussed in detail in Section 3.5.15.

SET EXT. MOD. RELAY (On/Off)

This option enables the external modulation input to be switched on or off. "ON" allows audio applied to the external modulation input to be summed with internally generated audio. The percent modulation, selected during the mode of operation in use, is referenced to internally generated audio only. External audio will add additional depth to the modulation. "ON" will be identified by a flashing "EMS" on the status line.

CALIBRATION MODE

The calibration mode places the NAV 2000R into a mode that guides the test/calibration user through the calibration and alignment steps of the NAV 2000R. The calibration mode is covered in detail in Section 3.5.16.

DISPLAY SYSTEM STATUS

This option displays the power on self test results and the current operational status of the NAV 2000R. It can be used to ensure proper operation of the NAV 2000R.

SYSTEM STATUS

GENERAL MODE: VOR OPERATION: LOCAL GPIB ADDRESS: 20 MODULATE: INTERNAL ON TIME: 3.3 HRS CYCLES: 15	**CPU** VERSION: 1.00 **ROM** UV BOOT: OK DYNAMIC: OK **RAM** STATIC: OK BATTERY: OK **DSP** VERSION: 1.01 BUS RESPONSE?: YES PROGRAM BOOT?: YES SINE ROM OK?: YES
RF SOURCE VERSION: 1.00 BUS RESPONSE?: YES RF LEVEL: OK RF FREQUENCY: OK	**MODULATOR** BUS RESPONSE?: YES AUDIO LEVEL: OK DETECT AUDIO: OK RF LEVEL: OK

*** PRESS **ENT** KEY TO CONTINUE ***

This is a typical STATUS screen. A brief description of the screen follows.

Under the GENERAL heading are; MODE: indicates current selected mode, OPERATION: LOCAL or REMOTE operation is selected, GPIB ADDRESS: selected GPIB address, MODULATE: indicates whether EXTERNAL audio, INTERNAL audio, or both is applied to the NAV 2000R modulator. ON TIME: indicates total time that the NAV 2000R has been powered on, in hours since manufacture. CYCLES: indicates the number of times that the NAV 2000R has been switched on.

Under the CPU heading are; VERSION: indicates software version number of the CPU board, ROM: indicates results of the UV BOOT ROM and DYNAMIC EPROM self tests, RAM: indicates results of the STATIC RAM and Battery RAM self tests.

Under the DSP headings are; VERSION: indicates software version number of DSP software, BUS RESPONSE?: indicates proper operation of DSP board bus interface, PROGRAM BOOT?: indicates results of the self test of DSP boot RAM, SINE ROM OK?: indicates results of the self test of DSP ROMS.

Under the RF SOURCE heading are; VERSION: indicates software version number of the internal RF generator software, BUS RESPONSE?: indicates proper operation of FREQ GEN bus interface, RF LEVEL: indicates whether RF LEVELING circuits are within limits, RF FREQUENCY: indicates frequency control loops operation.

Under the MODULATOR heading are; BUS RESPONSE?: indicates proper operation of MODULATOR bus interface, AUDIO LEVEL: indicates the current level of audio at the modulator input, DETECT AUDIO: indicates detected audio check during self-test passed or failed, RF LEVEL: indicates RF output level is being controlled.

EXECUTE DISPLAY TEST

This option allows a visual test of the display. The test turns on all of the display's pixels. A message, "PRESS KEY TO STOP", is moved around in the display in random places. Observe the display to determine if all of the pixels turn off and on properly. Then press any key to terminate the display test.

SET ALL REGISTERS TO DEFAULT

Sets all saved registers information and current field data selections to default factory settings.

3.5.15 EXTERNAL MODULATION MODE

External Modulation Mode (EMM) allows an external modulating signal to modulate the RF input. It is accessed through the Utility Menu by depressing a Mode control key for two seconds and then choosing option 2 from the Utility Menu. The External Modulation is AC coupled and is applied to the EXT. MOD IN port on the rear panel of the RF Modulator Module. The EMM menu shows external audio level high, low, or O.K. depending upon whether or not the peak of the audio signal is set appropriately. The level of an audio signal applied to the external modulation input is nominally 1 volt peak.

3.5.16 CALIBRATION MODE

The calibration mode of operation will aid the user in the calibration and alignment of the NAV 2000R unit. To calibrate the NAV 2000R, follow the instructions found on these pages. Additionally, the user should refer to the calibration procedure contained within this manual. This procedure furnishes more detailed test equipment setup instructions and should be used as the primary procedure. The pages displayed within the CALIBRATION mode are useful as aids and when selected, automatically sets NAV 2000R inputs and outputs to the required state for the alignment being made. Upon completion of each page of instruction press the "ENT" key. If an adjustment is to be skipped, pressing the 120 degree Bearing hot key will select the next page and therefore, setup conditions for that step of alignment.

3.5.17 DISPLAY DEFINITION DURING POWER ON SEQUENCE

This section defines the display definition during the NAV 2000R power-up sequence. During power-up, the NAV 2000R initializes the display screen and displays the JcAIR symbol and "NAV 2000R" using large sized characters while it executes a self test diagnostic. The diagnostic test results will be displayed under the heading "SYSTEM DIAGNOSTICS." as the self test proceeds. If all self tests are passed, a second screen will display. If any self test fails, the fail test flashes, as a notification to the operator. After a failed self test, the operator must press the ENT key for the unit to proceed. On the second screen which remains for approximately seven seconds, the current software version status of both the CPU and DSP boards is displayed. Following this screen, the NAV 2000R will enter normal operation, as defined by the unit configuration.

3.5.18 STORING & RECALLING SETUPS

The NAV 2000R has the ability to store and recall up to 49 different NAV 2000R conditions. All NAV 2000R selection options are stored to memory for later recall. The store function saves current NAV 2000R status, configuration setup, system mode of operation, field data, and the current page and field selector positions.

This means that all entries of the six primary modes: VOR, LOC, G/S, ADF, MKR, and COM, and the secondary modes: EMM, VORa, and LOCa are stored.

Current NAV 2000R conditions are stored by pressing and releasing the store, STO, key (while not field editing or entering). A pop up menu prompts for storage register number. The storage register number is entered using the numeric keypad and is a number from 1 to 49.

Previously saved NAV 2000R test setups are recalled by pressing the RCL key. A pop up menu prompts for the storage register number. The storage register number is entered using the numeric keypad and is a number from 1 to 49.

Following a recall, the NAV 2000R will remain in its current SELECTED MODE with the stored field data updating the previous setup. Selection of a different mode will then select that selected mode's recalled field data. Therefore, nine test setups, one of each operating mode, are stored and recalled for each register number.

If a setup is stored or recalled, this will continue to be displayed on the status line until a field is modified.

Recalling register 00 sets all NAV 2000R fields to factory default settings. Storage to register 00 is not possible.

Also, if the LOC/GS mode button is pressed while the recall "pop up" window is displayed, an ILS frequency pairings help screen will appear.

3.6 REMOTE USER INTERFACE

This section defines the NAV 2000R remote interface. The NAV 2000R achieves remote control via the GPIB.

3.6.1 GPIB REMOTE INTERFACE DESCRIPTION

The NAV 2000R will buffer incoming command characters until the GPIB controlling host signals an EOI (end of string) interrupt with the last data character. The NAV 2000R is capable of handling up to 4096 command characters at one time. If an incoming command string exceeds the 4096 byte mark, which primarily occurs with binary downloads, the NAV 2000R will truncate extra characters.

A maximum of 511 bytes of characters can be returned by the NAV 2000R at once. At present, all GPIB commands return only a few bytes of information. Therefore, 32 bytes are sufficient.

GPIB commands sent to the NAV 2000R are not case sensitive. That is, both lower and upper case characters are treated the same. Any "white space" characters are ignored, allowing the space character to be used freely to promote readability. The <CR> carriage return and <LF> line feed characters are treated as "white space" characters and are ignored.

All commands may be compounded by using the semicolon ';' character to separate each individual command. This allows the controller's application to send several setup commands at once if desired. However, if the controller requests the NAV 2000R to return multiple information, the last requested information will be the only data available.

After the GPIB controller sends a command string to the NAV 2000R, it may request a response from the NAV 2000R at anytime. A list of the returned data, for the given conditions are as follows:

1 If the last command sent was unrecognizable, the NAV 2000R will return the character '?'.

2 If the last command sent was recognized and, by definition, returns a value, that value will be returned by the NAV 2000R.

3 If a recognized command does not, by definition, return a value, the character '*' will be returned.

4 The '#' character is returned when a recognized command contains invalid parametric data (in the form of arguments). The parametric data may be unrecognizable or may just be out of range.

5 The '!' character is returned when a recognized command received is illegal for the current given NAV 2000R mode of operation.

6 The '%' character is returned if a NAV 2000R fatal error is in existence. This can occur with power up self test failures of major NAV 2000R internal systems.

If a command in the middle of a compound command string causes an error, ('?', '#', '!', '%' types), remaining commands within the command string will be ignored to allow notification to the controller that it's application has an unwanted condition present. This occurs during application debug stages due to syntax type errors.

3.6.2 COMMAND LIST

This Section contains the NAV 2000R command list. Each command is described using the following method:

1 Values to/from the NAV 2000R are denoted with the following letters:

D	Decimal characters; 0-9
H	Hexadecimal digits; 0-9, A-F
A	ASCII Alpha-Numeric characters; 0-9, A-Z

2 Letters surrounded with parenthesis indicate values that are returned from the NAV 2000R.

3 Letters not surrounded by parenthesis indicate command argument values.

4 Characters surrounded with box braces ('[]') indicate optional items from the user or characters that the NAV 2000R may possibly return.

COMMAND: RETURN SYSTEM STATUS
FORMAT: **STAT?** (HHHHHHHH)
|_____Least significant nibble

The STAT? command returns NAV 2000R's current system status word. Bits within this word indicate certain system conditions. A logic one (1) in the defined bits of the binary conversion of the hexadecimal number indicate:

BIT 0: Fatal error exists (Use FERR? for type)
BIT 1: HOST CPU operating from boot memory. NAV 2000R Operating software not running.
BIT 2: Remote only operation selected.
BIT 3: User edit occurring.
BIT 4: External modulation audio is summed with internal audio.
BIT 5: Not defined
BIT 6: VAL annunciator, Non standard value defined
BIT 7: Not defined
BIT 8: RF level is too high
BIT 9: RF level is too low
BIT 10: Modulation audio is too high for indicated modulation.
BIT 11: Modulation audio is too low for indicated modulation.
BIT 12: Detected RF is too high for 50% modulation peak.
BIT 13: Detected RF is too low for 50% modulation peak.
BIT 14: RF Modulator communication error detected.
BIT 15: Power ON self test is in progress.
BIT 16: GEN #1 Invalid RF frequency.
BIT 17: GEN #1 RF.
BIT 18: GEN #1 VCO1 is unlocked.
BIT 19: GEN #1 VCO2 is unlocked.
BIT 20: GEN #1 Self test error detected.
BIT 21: Not defined.
BIT 22: Not defined.
BIT 23: Not defined.
BIT 24: Reserved spare.
BIT 25: Reserved spare.
BIT 26: Reserved spare.
BIT 27: Reserved spare.
BIT 28: Reserved spare.
BIT 29: Not defined.
BIT 30: Not defined.
BIT 31: Not defined.

COMMAND: SET SYSTEM MODE OF OPERATION
FORMAT: **MODE= AAAAA**

The MODE= command sets the NAV 2000R mode of operation. It is equivalent to pressing the front panel mode select keys. The ASCII argument specified will determine the mode to be set. The valid modes of operation selectable remotely are: VOR, VORa, LOC, LOCa, G/S, ADF, MKR, COM[M], SCL and EMM.

COMMAND: RETURN CURRENT SYSTEM MODE OF OPERATION
FORMAT: **MODE? (AAAAAA)**

The MODE? command returns the present NAV 2000R mode of operation. The operational mode is returned using an ASCII string of characters. The system may return; VOR, VORa, LOC, LOCa, G/S, ADF, MKR, COM, SCL, EMM, CAL, or TEST.

COMMAND: RETURN FATAL ERROR STATUS
FORMAT: **FERR? (HHHH)**
|_____Least significant nibble

The FERR? command returns the NAV 2000R's fatal error status word. Bits within this word indicate certain fatal error conditions. A logic one (1) in the defined bits of the binary conversion of the hexadecimal number indicate:

BIT 0: HOST ROM FAILURE
BIT 1: HOST RAM FAILURE
BIT 2: HOST FLASH EPROM FAILURE
BIT 3: HOST SETUPS REGISTER FAILURE (BATTERY RAM)
BIT 4: HOST NONVOLATILE RAM FAILURE (BATTERY RAM)
BIT 5: Not defined
BIT 6: Not defined
BIT 7: Not defined
BIT 8: DSP RAM FAILURE
BIT 9: DSP BUS INTERFACE FAILURE
BIT 10: DSP BOOT FAILURE
BIT 11: DSP SINE LOOKUP ROM FAILURE
BIT 12: MODULATOR BUS INTERFACE FAILURE
BIT 13: RF GENERATOR #1 BUS INTERFACE FAILURE
BIT 14: Not defined
BIT 15: REVERSE POWER PROTECTION TRIPPED

COMMAND: RESET REVERSE POWER PROTECTION CIRCUIT
FORMAT: **RPP RESET**

The RPP RESET command resets the reverse power protection module if it has been tripped.

COMMAND: ENABLE FRONT PANEL CONTROL
FORMAT: **LOCAL**

Execution of the LOCAL command cancels REMOTE only operation. This re-enables user front panel control by unlocking the front panel keys. Remote commands are allowed during local operation of NAV 2000R. The system automatically forces remote operation with any command sent to the NAV 2000R.

COMMAND: SET ALL SETTINGS TO FACTORY DEFAULT VALUES
FORMAT: **DEFAULT**

The DEFAULT command forces the NAV 2000R to reset all data values to the default factory settings. All previously set data is lost upon execution of this command. Also EMS is cleared.

COMMAND: SET RF POWER LEVEL
FORMAT: **RF LEVEL= [+][-] DDD[.DDDDD] [units]**

This command sets the RF generator power level to the specified level in either dBm, uV, or mV units. The power units are specified following the data field. If a measure unit, either dBm, uV, or mV, is not specified, the NAV 2000R will default the data to be in dBm units. Range limits are checked to insure the user does not select a power level out of range for the selected mode of operation.

COMMAND: SET AUDIO OUTPUT LEVEL
FORMAT: **AUDIO LEVEL= [D].DDD**

This command allows the adjustment of the audio output level specifying using Vrms with 0.001 Vrms resolution. This command is only valid with VORa and LOCa audio control modes. The range allowed is from 0 to 1.000 Vrms.

COMMAND: SET RF OUTPUT FREQUENCY
FORMAT: **RF FREQ= [DDD].DDDDD**

This command allows the adjustment of the RF Generator output frequency using MHz with 0.00001 MHz resolution. The range allowed is from 0.150 to 450.000 MHz.

COMMAND: SET MARKER BEACON MODE
FORMAT: **MKR MODE= AAAAA**

This command sets the current marker beacon mode of operation. The argument value must be any of the three:,OUTER, MIDDLE or INNER. With the execution of this command, the NAV 2000R will automatically reset the marker frequency to the default value.

COMMAND: SET VOR BEARING
FORMAT: **BEARING= DDD[.DD]**

The BEARING command sets the current VOR bearing. Values from 0 to 359.99 will be allowed.

COMMAND: SET DDM
FORMAT: **DDM=.DDD**

The DDM set command allows the user to define the desired DDM value for Localizer and Glideslope modes of operation. Issuing a subsequent modulation percentage set command, for either the 90 Hz or 150 Hz modulation percentages, overrides this command.

COMMAND: SET VOR REFERENCE (TO/FROM)
FORMAT: **VOR REF= AAAA**

This command sets the current VOR reference as either being TO or FROM.

COMMAND: SET LOCALIZER REFERENCE (LEFT/RIGHT)
FORMAT: **LOC REF= AAAAA**

This command sets the current Localizer DDM reference as either being LEFT or RIGHT. Issuing a subsequent modulation percentage set command, for either the 90 Hz or 150 Hz modulation percentages, overrides this command.

COMMAND: SET GLIDESLOPE REFERENCE (UP/DOWN)
FORMAT: **G/S REF= AAAA**

This command sets the current Glideslope DDM reference as either being UP or DOWN. Issuing a subsequent modulation percentage set command, for either the 90 Hz or 150 Hz modulation percentages, overrides this command.

COMMAND: SET IDENTIFICATION MODE
FORMAT: **IDENT MODE= AAAA**

This command selects whether the identification code is to be modulated either constant or Morse coded. The ASCII argument should be TONE for constant modulation, CODE for coded modulation, or OFF for no modulation. This command effects only VOR, LOC, ADF and MKR modes of operations.

COMMAND: SET IDENTIFICATION CODE
FORMAT: **IDENT CODE= AAAAA**

This command sets the desired identification code for VOR, LOC and ADF modes. The number of ASCII characters allowed is six and any other characters will be truncated.

COMMAND: DOT TIME LENGTH
FORMAT: **DOT TIME= DDD**

This command changes the period of time defining a Morse code DOT. Range is from 50 to 250 ms (1 ms steps).

COMMAND: DASH TIME LENGTH
FORMAT: **DASH TIME= DDD**

This command changes the period of time defining a Morse code DASH. Range is from 150 to 750 ms (1ms steps).

COMMAND: DOT/DASH SPACING LENGTH
FORMAT: **DOT DASH SPACE= DDD**

This command may be used to change the period of time defining Morse code spacing between DOTS and, or DASHES of a character. Length may vary from 50 to 250 ms in steps of 1 ms.

COMMAND: CHARACTER SPACING LENGTH
FORMAT: **CHAR SPACE= DDD**

This command may be used to change the time defining Morse code spacing between characters. Length may vary between 150 and 750 ms in 1 ms steps.

COMMAND: IDENTIFICATION WORD RATE
FORMAT: **WORD RATE= DD[.D]**

This command may be used to set the repetition rate at which the Morse Code identifier is transmitted. Rate may be programmed from 1.0 to 65.0 seconds with 0.1 second resolution.

COMMAND: IDENTIFICATION WORD DELAY
FORMAT: **WORD DELAY= DD[.D]**

This command may be used to set the delay from the end of a Morse code identifier transmission to the beginning of the next transmission. Word rate as defined above is calculated. Time may be programmed to produce any word rate from 1.0 to 65.0 seconds with 0.1 second resolution.

COMMAND: SET 30 Hz FREQUENCY
FORMAT: **30 HZ= DD[.D]**

This command changes the 30 Hz frequency. The 30 Hz signal is only generated during VOR mode. The argument value is specified in Hz with 0.1 Hz resolution.

COMMAND: SET 90 Hz FREQUENCY
FORMAT: **90 HZ= DD[.D]**

This command deviates the 90 Hz frequency. The 90 Hz signal is only generated during the LOC and G/S modes. The argument value is specified in Hz with 0.1 Hz resolution.

COMMAND: SET 150 Hz FREQUENCY
FORMAT: **150 HZ= DD[.D]**

This command deviates the 150 Hz frequency. The 150 Hz signal is only generated during the LOC and G/S modes. The argument value is specified in Hz with 0.1 Hz steps.

COMMAND: SET 90/150 Hz PHASE
FORMAT: **PHASE = DDD[.DD]**

This command deviates the 90 Hz and 150 Hz phase relationship. These signals are only generated during the LOC and G/S type modes. The argument value is specified in degrees with 0.01 degree resolution and may range from 0 to 359.99 degrees.

COMMAND: SET 9960 Hz FREQUENCY
FORMAT: **9960 HZ= DDDDD[.D]**

This command deviates the 9960 Hz frequency. The 9960 Hz signal is only generated during the VOR modes. The argument value is specified in Hz with 0.1 Hz resolution. The valid frequency that may be specified may range from 9,000 to 12,000 Hz.

COMMAND: SET 1020 Hz FREQUENCY
FORMAT: **1020 HZ= DDDDD[.D]**

This command allows the user to deviate the 1020 Hz identification frequency. The 1020 Hz signal is only generated during the VOR and LOC modes. The units are in Hz with 0.1 Hz resolution and may range from 10 to 18000 Hz.

COMMAND: SET MARKER BEACON FREQUENCY
FORMAT: **MKR FREQ= DDDDD[.D]**

This command sets the marker beacon frequency to a specific value. This command must follow a marker beacon mode set command since marker beacon frequency is automatically set to be the default when the beacon mode changes.

COMMAND: SET COMMUNICATION FREQUENCY TONE #1
FORMAT: **COM FREQ1= DDDDD[.D]**

This command sets the desired communication tone #1's frequency. The communication frequency is specified in Hz using 0.1 Hz resolution and may range anywhere from 10 to 18,000.0 Hz.

COMMAND: SET COMMUNICATION FREQUENCY TONE #2
FORMAT: **COM FREQ2= DDDDD[.D]**

This command sets the desired communication tone #2's frequency. The communication frequency is in Hz with 0.1 Hz resolution. It's setting may also range from 10 to 18,000 Hz.

COMMAND: SET ADF FREQUENCY
FORMAT: **ADF FREQ = DDDD[.D]**

This command sets the ADF tone frequency. This command is only valid during the ADF mode of operation. The programmable resolution is 0.1 Hz. The valid range is 10.0 Hz to 18000.0 Hz.

COMMAND: SET 30 Hz MODULATION PERCENTAGE
FORMAT: **30HZ %MOD= DD[.DD]**
FORMAT (VORa mode only): **30HZ %MOD= AAA**

This command sets the 30 Hz tone modulation percentage. The 30 Hz signal is produced only during the VOR modes of operation. During the VORa audio control mode, an ASCII string of "ON" or "OFF" must be specified. With normal VOR mode, a numeric value may be specified with 0.01 % resolution.

COMMAND: SET 90 Hz MODULATION PERCENTAGE
FORMAT: **90HZ %MOD= DD[.DD]**
FORMAT (LOCa mode only): **90HZ %MOD= AAA**

This command sets the 90 Hz modulation percentage. The 90 Hz signal is produced during LOC and G/S modes of operation. Setting the 90 Hz modulation percentage may cancel (or change) any previously DDM or DDM reference settings. During the LOCa audio control mode, an ASCII string of "ON" or "OFF" must be specified. With normalized modes, a numeric value may be specified with 0.01 % resolution.

COMMAND: SET 150 Hz MODULATION PERCENTAGE
FORMAT: **150HZ %MOD= DD[.DD]**
FORMAT (LOCa mode only): **150HZ %MOD= AAA**

This command sets the 150 Hz modulation percentage. The 150 Hz signal is produced during LOC and G/S modes of operation. Setting the 150 Hz modulation percentage may cancel (or change) any previously DDM or DDM reference settings. During the LOCa audio control mode, an ASCII string of "ON" or "OFF" must be specified. With normalized modes, a numeric value may be specified with 0.01 % resolution.

COMMAND: SET 9960 Hz MODULATION PERCENTAGE
FORMAT: **9960HZ %MOD= DD[.DD]**
FORMAT (VORa mode only): **9960HZ %MOD= AAA**

This command sets the 9960 Hz tone modulation percentage. The 9960 Hz signal is produced only during the VOR modes of operation. During the VORa audio control mode, an ASCII string of "ON" or "OFF" must be specified. With normal VOR mode, a numeric value may be specified with 0.01 % resolution.

COMMAND: SET 1020 Hz MODULATION PERCENTAGE
FORMAT: **1020HZ %MOD= DD[.DD]**

This command sets the 1020 Hz modulation percentage and is produced only during VOR and LOC modes of operation. The resolution is 0.01 %.

COMMAND: SET MARKER BEACON MODULATION PERCENTAGE
FORMAT: **MKR %MOD= DD[.DD]**

This command sets the marker beacon modulation percentage of tone #1. This marker beacon signal is produced only during the marker beacon mode of operation and has a program resolution of 0.01 %.

COMMAND: SET COMMUNICATION MODULATION % TONE #1
FORMAT: **COM %MOD1= DD[.DD]**

This command sets the communication tone 1 signal modulation percentage. This command is only valid during the communications (COM) mode of operation. The programmable resolution is 0.01 percent.

COMMAND: SET COMMUNICATION MODULATION % TONE #2
FORMAT: **COM %MOD2= DD[.DD]**

This command sets the communication tone 2 signal modulation percentage. This command is only valid during the communications (COM) mode of operation. The programmable resolution is 0.01 percent.

COMMAND: SET TOTAL PERCENT OF MODULATION
FORMAT: **TOTAL %MOD= DD[.DD]**

This command allows the total percent of modulation to be programmed within the VOR, LOC, G/S, and COM modes of operation. This command changes all the percent mods. for a given mode equally. The total may range from 0 to 99.00 % and can be specified with 0.01 % resolution.

COMMAND: SET EXTERNAL MOD MODULATION %
FORMAT: **EMM %MOD= DD[.DD]**

This command sets the modulation percentage of the external modulating signal. This value is used only in the external modulation mode (EMM) and represents the actual depth of modulation only with proper level applied to the external modulation input.

COMMAND: SET ADF MODULATION PERCENTAGE
FORMAT: **ADF %MOD= DD[.DD]**

This command sets the ADF tone modulation percentage. This command is only valid during the ADF mode of operation. The programmable resolution is 0.01 percent. The valid range is 0.0% to 99.00%.

COMMAND: EXTERNAL MODULATION INPUT ON/OFF
FORMAT: **EXT MOD= AAA**

This command either switches "ON" the external modulation input to be summed with internally generated audio, or switches the external modulation input "OFF".

COMMAND: RETURN SOFTWARE VERSION OF CPU BOARD
FORMAT: **SVC? (A...A)**

This command requests the NAV 2000R to return the current CPU board software version number. The version is returned as an ASCII string.

COMMAND: RETURN SOFTWARE VERSION OF DSP BOARD
FORMAT: **SVD? (A...A)**

This command requests the NAV 2000R to return the current DSP board software version number. The version is returned as an ASCII string.

COMMAND: RETURN SOFTWARE VERSION OF GENERATOR #1 BOARD
FORMAT: **SVG? (A...A)**

This command requests the NAV 2000R to return the current GENERATOR #1 board software version number. The version is returned as an ASCII string.

COMMAND: SET SELECTIVE CALLING RF ON/OFF
FORMAT: **SCL RF KEY= AAA**

This command switches "ON" or "OFF" the Selective Calling RF carrier. When this command is sent to the NAV 2000R, the two Selective Calling pulses are transmitted using the current settings. After the "ON" command is sent, the carrier will remain on after the SELCAL pulses have been transmitted. After the "OFF" command is sent, the carrier is turned off after the SELCAL pulses have been transmitted.

COMMAND: SET SELECTIVE CALLING ACTIVE/INACTIVE
FORMAT: **SCL INIT= AAAAAAAA**

This command initiates the transmission of the two Selective Calling pulses, using the current settings, when "ACTIVE" is in the data field. When "INACTIVE" is in the data field, the transmission of the two Selective Calling pulses is stopped.

COMMAND: SET PULSE PERCENT OF MODULATION
FORMAT: **SCL %MOD= DD[.DD]**

This command allows the percent of modulation to be programmed for the pulses in the Selective Calling mode of operation. The total may range from 0 to 99.00 % and can be specified with 0.01 % resolution.

COMMAND: SET TONE AMPLITUDE DIFFERENCE
FORMAT: **SCL DIFF= [+][-] DD**

This command allows the amplitude difference between TONE #1 and TONE #2 (of PULSE #1 and PULSE #2) to be programmed in the Selective Calling mode of operation. The total may range from -40 to +40 dB and can be specified with 1 dB resolution. The value of the difference specifies TONE #1 with respect to TONE #2.

COMMAND: SET SELECTIVE CALLING PULSE #1 CODE
FORMAT: **SCL 1 CODE= AA**

This command allows the PULSE #1 code to be programmed in the Selective Calling mode of operation. The code specifies the frequency of the two tones modulated in PULSE #1. The first ASCII character in the code specifies TONE #1 frequency and the second specifies TONE #2 frequency. The code may range from A to S for each tone.

COMMAND: SET SELECTIVE CALLING PULSE #2 CODE
FORMAT: **SCL 2 CODE= AA**

This command allows the PULSE #2 code to be programmed in the Selective Calling mode of operation. The code specifies the frequency of the two tones modulated in PULSE #2. The first ASCII character in the code specifies TONE #1 frequency and the second specifies TONE #2 frequency. The code may range from A to S for each tone.

COMMAND: SET PULSE #1 TONE #1 FREQUENCY
FORMAT: **SCL 1 TONE 1= DDDD[.D]**

This command allows changing the standard frequency (set with SCL 1 CODE command) for TONE #1 of PULSE #1 for the Selective Calling mode of operation. The frequency is specified in Hz using 0.1 Hz resolution and the range is from 100 to 9999.9 Hz.

COMMAND: SET PULSE #1 TONE #2 FREQUENCY
FORMAT: **SCL 1 TONE 2= DDDD[.D]**

This command allows changing the standard frequency (set with SCL 1 CODE command) for TONE #2 of PULSE #1 for the Selective Calling mode of operation. The frequency is specified in Hz using 0.1 Hz resolution and the range is from 100 to 9999.9 Hz.

COMMAND: SET PULSE #2 TONE #1 FREQUENCY
FORMAT: **SCL 2 TONE 1= DDDD[.D]**

This command allows changing the standard frequency (set with SCL 2 CODE command) for TONE #1 of PULSE #2 for the Selective Calling mode of operation. The frequency is specified in Hz using 0.1 Hz resolution and the range is from 100 to 9999.9 Hz.

COMMAND: SET PULSE #2 TONE #2 FREQUENCY
FORMAT: **SCL 2 TONE 2= DDDD[.D]**

This command allows changing the standard frequency (set with SCL 2 CODE command) for TONE #2 of PULSE #2 for the Selective Calling mode of operation. The frequency is specified in Hz using 0.1 Hz resolution and the range is from 100 to 9999.9 Hz.

COMMAND: SET SELECTIVE CALLING PULSE #1 TIME
FORMAT: **SCL 1 TIME= D.DDD**

This command programs the pulse width of PULSE #1 in the Selective Calling mode of operation. The range is from 0 to 2.000 S in .001 S steps.

COMMAND: SET SELECTIVE CALLING PULSE #2 TIME
FORMAT: **SCL 2 TIME= D.DDD**

This command programs the pulse width of PULSE #2 in the Selective Calling mode of operation. The range is from 0 to 2.000 S in .001 S steps.

COMMAND: SET SELECTIVE CALLING GAP TIME
FORMAT: **SCL GAP TIME= DDD**

This command programs the period of time between PULSE #1 and PULSE #2 in the Selective Calling mode of operation. The range is from 0 to 999 ms in 1 ms steps.

COMMAND: SET SELECTIVE CALLING TEST FREQUENCY
FORMAT: **SCL TEST FREQ= DDDDD.D**

This command programs the test frequency used in the Selective Calling mode of operation. This frequency is output as a test tone following the Selective Calling pulses. The range is from 10.0 to 18000.0 Hz in 0.1 Hz steps.

COMMAND: SET TEST TONE PERCENT OF MODULATION
FORMAT: **SCL TEST %MOD= DD[.DD]**

This command allows the percent of modulation to be programmed for the test tone in the Selective Calling mode of operation. The total may range from 0 to 99.00 % and can be specified with 0.01 % resolution.

3.7 USING THE EXTERNAL AUDIO INPUT

To operate the NAV 2000R in External Modulation Mode, the mode is first selected through the Utility menu. This is accomplished by pressing and holding any of the mode select keys for more than two seconds. Then, the EMM mode is selected by pressing number 2 from the numeric keypad. The external modulation is applied to the RF Modulator Module EXT MOD IN input which is accessible on the rear of the NAV 2000R.

The external audio input may be used in two ways. The audio applied may be summed with internally generated audio, or may be controlled separately within the EMM mode. External audio is AC coupled with a flat frequency response from 10 Hz through 22 kHz. The external audio input may be switched on or off during the five primary modes by means of the UTILITY MENU or automatically turned on, upon entering the EMM mode.

During the primary operational modes of the NAV 2000R, the external audio is equally summed with internally generated audio. With an input level of 1.00 V peak, the total modulation depth is doubled. For example, if the total % mod is 40% in LOC mode and a 1.00 V peak signal is applied to an enabled external mod audio input, the total modulation depth may be as high as 80%. Adjusting the input audio level from the 1.00 V peak level will change the ratio of the internal to external audio applied to the RF modulator.

In the EMM mode, all internal audio generation is switched off. The user may specify the modulation level produced from a fixed level external source. An audio level indicator tells the user when the proper level is applied. At this point, the depth of modulation produced matches the specified modulation %. The NAV 2000R is normally calibrated for an input audio level of 1.00 V peak.

3.8 USING AUDIO OUTPUT

The composite audio signal is accessible at the rear of the NAV 2000R. This signal is capable of driving a 600 Ω load and is calibrated to provide a fixed 2 V peak signal. Only during the audio control modes, VORa and LOCa, the output varies, from 0 to 1 V rms, according to the value set within the audio level field.

SECTION IV
THEORY OF OPERATION

4.1 GENERAL INFORMATION

The NAV 2000R Theory of Operation is contained in this Section. The General Description section describes the function of the various parts of the hardware. The Functional Description discusses the output parameters of the NAV2000R. The Software section covers the software with respect to how it affects the hardware.

4.2 UNIT DESCRIPTION

The NAV 2000R has three major sections; the front panel, rear panel and chassis. The front panel includes the keypads, power switch and display and is used for local operation. The chassis section includes the housing, power supply, and line power connection. Within the housing is a card cage which contains the motherboard and slots for the system computer (CPU) board, DSP board, and AM Modulator Module. The synthesizer module is mounted next to the card cage.

4.2.1 FRONT PANEL

The front panel contains the flat panel electro luminescent display, the ON/OFF power switch, the mode select keypad, the cursor control and select keypad, "hot" key keypad, and the numeric keypad. Each of the keypads are part of one keyboard. The display horizontal sync, vertical sync, clock and display data are routed to the display through the keypad board.

The keypads are mapped into two banks. When a key is depressed (after debouncing), its row and column are latched on the keypad board. Additionally, the row and column is decoded to determine whether the depressed key is from the upper or lower bank. This bank decoding actually forms part of the address which the system processor uses to access the latches which indicate row and column.

The display is driven by the system computer board. The video dynamic RAM is written to the display on a refresh basis. To refresh the display, a DMA of the contents of the video RAM to a parallel to serial interface is done every horizontal sync period. The parallel to serial interface converts the dynamic video RAM contents to a two byte row and column address. Although the write to the interface is on one write cycle, the write to the display is actually on two write cycles; one for the row and one for the column. The data is then applied to a parallel to serial converter and, along with the generated clock and horizontal and vertical syncs, is routed through the keypad board to the display.

4.2.2 REAR PANEL

The rear panel provides access to the card cage modules, the power connector, fuse holder and the synthesizer module. The system computer board, DSP board, and AM module are removable from the rear panel. The system computer board provides an IEEE-488 interface connector. The external mod audio input, RF input, and RF output are provided as part of the AM modulator. An audio output is provided as part of the DSP board. Time base input and output are provided as part of the synthesizer module.

4.2.3 CHASSIS INTERIOR LAYOUT

The chassis interior consists of the power supply, card cage, and interconnection wiring.

The power supply voltages are +5 V, -12 V, +15 V, and +24V.

The card cage is built around the motherboard which has filtering and voltage regulation. It provides +5 V digital and +5 V analog voltages and regulated -5 V digital and -5 V analog voltages. The system computer board, DSP board, and RF module plug into connectors located on the motherboard. The synthesizer module plugs into a ribbon cable and a RF cable coming from the motherboard.

4.3 FUNCTIONAL DESCRIPTION

The output parameters of the NAV 2000R are discussed in the following sections.

4.3.1 RF OUTPUT LEVEL

The RF Output level control is provided by an automatic leveling loop and a programmable step attenuator. The programmable step attenuator and leveling loop provide 0.1 dB steps. These are controlled automatically by the system computer and drivers located on the audio board of the RF Modulator Module and found on the front panel of -50 models. The RF output is found on the edge of the RF Modulator Module accessible from the rear panel on -60 models. The output can be set from +7 dBm to -120 dBm. The leveling loop is temperature and frequency response compensated.

4.3.2 FREQUENCY

The RF frequency coverage provided is .15 MHz to 450 MHz. This is generated within the synthesizer module. The output level of the synthesizer is maintained at -20dBm. A 10 MHz TCVCXO is used as the internal frequency standard. An external standard of 10 MHz may be applied at the TIMEBASE, 10 MHz INPUT. Sensing a signal applied at the 10 MHz INPUT, the synthesizer will automatically switch, phase locking the internal standard to the applied external standard.

4.3.3 VOR SIGNAL GENERATOR

The VOR audio signal is generated by the DSP board and is used to amplitude modulate the RF input signal. The VOR signal is computed by the DSP and consists of a 9960 Hz tone, frequency modulated at 30 Hz, summed with a 30 Hz tone. The phase relationship between the 30 Hz FM of the 9960 Hz carrier tone and the 30 Hz tone represents bearing information. To this, the DSP may add an identification of either a 1020 Hz tone or 6 digit Morse code word at 1020 Hz. The composite audio signal is set for percent modulation by the audio board of the AM Modulator Module.

4.3.4 ILS SIGNAL GENERATOR

The ILS signals consists of Localizer (LOC), Glide Slope (G/S), and Marker Beacon (MKR). The audio signal for each is generated by the DSP board and amplitude modulates the RF input signal. The conditions of the modulating audio composite signal is controlled by the system computer.

Both LOC and G/S consist of a 90 Hz tone and a 150 Hz tone at variable amplitudes depending upon the DDM (Difference in Depth of Modulation) setting. The DSP processor computes the composite modulating signal. First, it sets up the amplitude ratio needed to achieve the DDM setting based upon which beam is selected as a reference: LEFT or RIGHT for localizer, TOP or BOTTOM for G/S. For LOC only, an identification of either a 1020 Hz tone or a one to six letter Morse code word at 1020 Hz may be added to the 90 Hz and 150 Hz tones. The audio signal for both LOC and G/S is applied to the audio board attenuator where it is attenuated according to the current modulation percentage before amplitude modulating the RF carrier on the RF modulator board. For G/S, the sum of the 90 Hz and 150 Hz modulation percentages cannot exceed 99% and for LOC the sum of the 90 Hz, 150 Hz, and 1020 Hz modulation percentages cannot exceed 99%.

Marker Beacon (MKR) audio signals are generated by the DSP processor board and are a user specified tone. The MKR audio signal may be pulsed at a rate determined by the beacon selected: inner, middle, or outer. The percent modulation is achieved by the attenuator on the audio board before amplitude modulating the carrier on the RF Modulator Board. The marker beacon frequency may be programmed away from its normal setting, anywhere from 10 to 18,000.0 Hz with 0.1 Hz resolution.

4.3.5 COM SIGNAL GENERATOR

The COM (Communications) audio signals are generated by the DSP board. One or two tones of user specified frequency are generated by the DSP processor to test communications equipment. The percent modulation is set by the system controller processor using the attenuator on the audio board. The sum of the two tones is limited to 99%. Then, on the RF Modulator Board, the audio signal amplitude modulates the RF carrier.

4.3.6 SYSTEM COMPUTER BOARD THEORY OF OPERATION

The system computer board controls the operation of the NAV 2000R. It consists of a microprocessor, a boot ROM, four memories, a GPIB interface, a video generator, a keyboard interface, buss control circuitry, discrete hardware control, and a slave controller. A block diagram of the board (JPN 40-5742-00) is located in Section V of this manual.

The microprocessor starts by running EPROM boot code. This boot code, residing in EPROM, verifies the operating code residing within the EEPROM. With operating code verified, program execution jumps to the EEPROM.

The battery backed RAM contains system status flags, calibration information, global system parameters, and the operator setup memory. Each mode may store up to 49 setups in program memory. When saved, the complete system record is saved. Thus, when recalled, the system will return to that state. Memory 0 recalls the factory set defaults.

The MUART (Multi-function Universal Asynchronous Receiver & Transmitter) provides serial communication ability, discrete hardware control, additional timers, and a slave interrupt controller. The slave interrupt controller has as inputs the key pressed interrupt, and the buss grant error interrupt. These in turn are hardware interrupts to the processor.

The GPIB interface provides a GPIB talker/listener ability. Provision for a GPIB controller is also present but is not implemented.

The video generator decodes row and column data and transmits the data to the display. Also, the microprocessor generates the horizontal and vertical sync signals. A 16.384 MHz clock is provided to the display to clock in data.

The Bus Request / Bus Grant circuitry is used by the microprocessor to control the DSP board and RF Modulator Module busses. A Bus Request addresses a board or module. The board or module floats all necessary local buss control lines and returns a Bus Grant. Each Bus Grant is an open collector output simplifying their parallel connection.

The keyboard Bank Latch selects the bank of keyboard keys, upper or lower, which are read upon a key press interrupt service read.

4.3.7 DSP BOARD THEORY OF OPERATION

The digital signal processor board of the NAV 2000R is designed around Analog Device's digital signal processor, ADSP 2105. The board generates various fixed level complex waveforms.

The digital signal processor uses a sine lookup table ROM to obtain values for sine and cosine functions (reference DSP Board Block diagram, JPN Drawing 40-5743-00, located in Section V of this manual). The DSP board generates simple tones, frequency modulated tones and a combination of these signals. Digital data from the DSP processor is sent to a 8 times over sampling digital filter whose output rate is 8 times higher than the input sample rate. The digital filter adds additional reconstruction points according to the algorithm and coefficients stored in the filter chip. The output of the digital filter is applied to a serial input 16 bit D/A converter. The output of the D/A converter is passed through a 3 pole low pass Butterworth filter. The filtered output is available internally at the main connector. A buffered output is available through a BNC connector.

The output function of the DSP board is divided into two modes: 1) VOR mode 2) Alternate mode. In the VOR mode, the output waveform is a combination of three tones with variable amplitude, with one of the tones being frequency modulated. In alternate mode, the output waveform is a combination of a maximum of three variable amplitude tones.

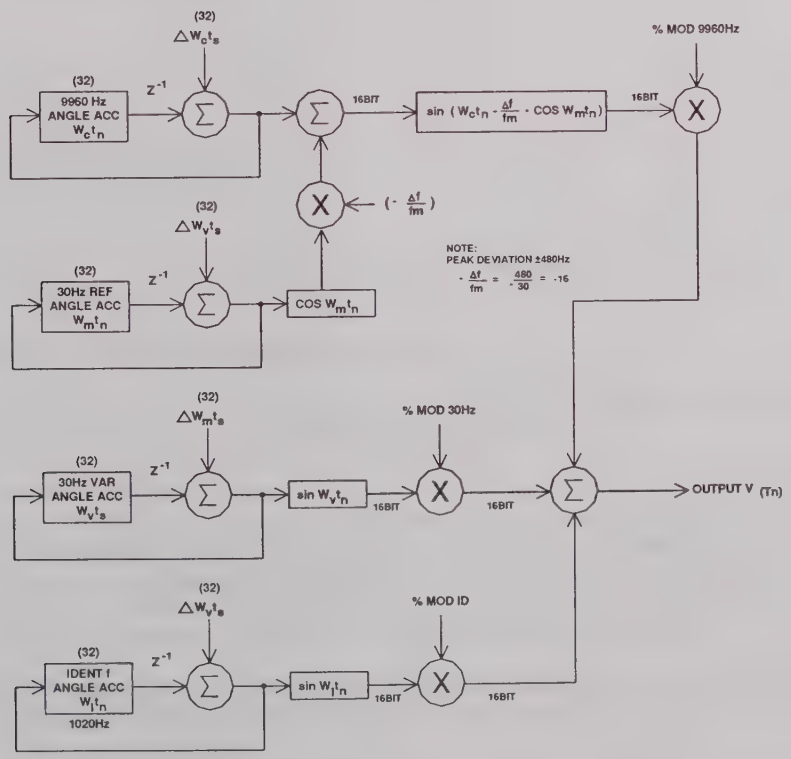

FIGURE 4-1: VOR SIGNAL GENERATOR BLOCK DIAGRAM

The following equation describes the VOR mode:

$$A_c SIN(w_c t_i - (df/f_m).COS(w_m t_i)) + A_v SIN(w_v t_i) + A_i SIN(w_i t_i)$$

where,

A_c = Amplitude of the carrier signal.
A_v = Amplitude of the reference signal.
A_i = Amplitude of the ident signal.
$w_c t_i$ = Instantaneous phase of the carrier.
$w_m t_i$ = Instantaneous phase of the modulation signal.
$w_v t_i$ = Instantaneous phase of the reference.
$w_i t_i$ = Instantaneous phase of the ident tone.
df = Peak frequency deviation = +/- 480 Hz
f_m = Frequency modulation = 30 Hz

The first term is a carrier signal with the frequency modulated reference. The second term is the variable signal and the third term is the identification (ident) signal. The VOR ident signal may be used to generate Morse code. VOR is a complex signal, which combines a variable amplitude frequency modulated carrier and two variable amplitude tones.

The alternate mode sums three individual tones with variable amplitudes. The following equation describes the alternate mode:

$$A_1 SIN(w_1 t_i) + A_2 SIN(w_2 t_i) + A_3 SIN(w_3 t_i)$$

where,

A_1 = Amplitude of the tone 1 signal.
A_2 = Amplitude of the tone 2 signal.
A_3 = Amplitude of the tone 3 signal.
$w_1 t_i$ = Instantaneous phase of tone 1.
$w_2 t_i$ = Instantaneous phase of tone 2.
$w_3 t_i$ = Instantaneous phase of tone 3.

The first term is the instantaneous amplitude of tone 1. The second and the third term are the instantaneous amplitude of tone 2 and tone 3.

4.3.8 RF MODULATOR MODULE DESCRIPTION

The RF modulator module amplitude modulates (AM) a CW carrier input with an audio input signal and provides control over percent modulation and average power output.

The RF modulator module consists of an audio board, an RF modulator board, and a programmable step attenuator. The modulation of a CW carrier is achieved by applying the CW signal to the RF modulator board where it is modulated by signals appropriately conditioned for percent modulation by the audio board. The output power is leveled on the RF modulator board and the desired output power level is achieved by switching in sections of the programmable step attenuator, for each 1 dB step and by moving the reference voltage controlled by the leveled output power for each .1 dB step.

The boards are interfaced to the NAV 2000R system computer via the audio board which controls the RF board and step attenuator. An in depth treatment of the modulation process is provided in the following sections.

JPN Drawing 40-9520-51 (located in Section V of this manual) shows the Block diagram of the RF Modulator Module. An operational explanation of the process of modulation and a functional description of each of the module components follow.

4.3.9 MODULATOR GENERAL OPERATIONAL DESCRIPTION

The general operation of the NAV 2000R RF modulator module is discussed in this Section. Also reference JPN Drawing 40-9520-51 located at the end of the drawings in Section V of this manual.

The module consists of an audio board, an RF board, and a programmable attenuator. An RF carrier is applied to the RF input port via the mother board. This CW signal is generated within the synthesizer module.

The amplitude modulating audio signal is either generated internally by the NAV 2000R DSP board or provided externally from the external audio input. On the audio board, the modulating audio signal level is adjusted and monitored to generate the desired modulation percentage. Then, it is applied to a temperature compensating amplifier on the RF board. This signal is then applied as a gain controlling bias to a variable gain amplifier which acts as an RF modulator.

The modulated RF signal is amplified and the output is leveled by an automatic leveling control loop. An audio detector in the automatic leveling control loop circuitry also provides the detected audio output. After leveling, the modulated RF carrier is applied to a programmable step attenuator.

The programmable step attenuator circuit allows the output power to be programmed in 1.0 dB steps while the leveling loop adjusts output power in 0.1 dB steps. The external audio modulation input is provided on the rear panel. The modulator module also generates RF output high/low, audio input high/low, and detected audio high/low (at 50% modulation with a single tone) indications to the NAV 2000R system computer. The system computer monitors these indicators to provide some self testing during normal operation and during power on self test.

4.3.10 AUDIO BOARD OPERATION

The audio board accepts a fixed level audio signal. The level of this signal is adjusted and summed with a DC voltage level to produce a 1 + modulation signal achieving the desired modulation percentage. It also provides a bus interface for the RF modulator module to the NAV 2000R system computer. This enables the system computer to control and monitor the module.

The audio signal input to the audio board can either be generated by the NAV 2000R DSP board or applied via an external input. The external input may be switched on or off. It is AC coupled into the modulator audio circuitry.

The RF Modulator Module Bus Interface circuitry provides the bus interface to the NAV 2000R system computer. It consists of bus request/bus grant bus timing circuitry, RF modulator command decoding, and RF module control signals.

The Modulation Centering & Calibration circuitry, Audio High/Low Indication circuitry, and % Modulation Level Set Attenuator circuitry are used along with the Voltage Reference to provide a precisely calibrated audio modulating signal to the RF Board.

The Audio High/Low Indication circuitry indicates whether or not the audio input amplitude has been properly set. A single tone modulating signal is applied and if its peak falls one half percent above or below the required peak amplitude, an indication is provided. The status of these high/low bits are read by the NAV 2000R system computer.

The % Modulation Level Set Attenuator attenuates the audio input signal by an amount which corresponds to a desired percent modulation. Subsequently, the audio input signal is added to a DC level in the % Modulation Centering & Calibration circuit. Assume that the DC level is normalized to 1. Then, after adding the audio input with no attenuation the resultant signal should give 100% modulation. For 100% modulation, the largest peak reaches the normalized value of 2 and deepest null swings to zero. The required attenuation values used to achieve from 0% to 100% modulation are stored in the NAV 2000R system computer. Therefore, to achieve 50% modulation, the modulating signal applied to the audio board will have its amplitude reduced by a factor of one half. Note that percent modulation is given by

$$\% \text{ mod} = [(1+m)A-(1-m)A]/[(1+m)A+(1-m)A] * 100 = m * 100\% \ ,$$

where m is the modulation index and A is the carrier amplitude. The modulation index parameter controls the relative proportions of sideband to carrier levels. The factor m is also the factor by which the input signal should be attenuated to achieve a desired percent modulation, i.e. for 50%, m=.5 and for 25%, m=.25, etc.

The % Modulation Centering & Calibration circuitry adjusts the DC level of the composite modulating signal and calibrates the audio modulating signal. Before being applied to the RF modulator, the audio signal must have the proper AC and DC levels. The DC level determines the range of RF levels which the Voltage Gain Amplifier of the RF modulator board will produce. This DC level is set so that the variable gain input to the VGA provides the optimum dynamic range. Due to the wide linear dynamic range of the gain control input, the DC component of the audio signal is not highly critical. However, the AC component of the audio signal applied to the VGA must be calibrated very accurately, as it determines the % modulation. Calibration of the AC component is achieved by setting the % modulation attenuator to provide 50% modulation modulating signal. Then, the centering and calibration circuitry with the voltage reference adjusts the resultant modulated RF output to be 50.0% (measured using a modulation meter).

The Programmable Step Attenuator Control circuits provide control signals which set the attenuation of the programmable step attenuator, respectively. The Programmable Step Attenuator has eight control lines which provide values of attenuation in one dB steps. The step attenuator program word is not sequential. Each control line activates either a one, two, four, eight, sixteen, thirty two, or sixty four dB attenuator. Thus, to obtain a given value of attenuation the proper values of attenuation must be selected so that the sum total of the attenuation is that which is desired. As a result, the control word which controls the value of attenuation, being non-sequential, is stored in NAV 2000R system computer memory.

To achieve 1/10th dBm steps, a circuit is added to allow the step attenuator setting to be varied. This circuit uses a DAC circuit to vary a reference signal to the leveling loop.

The detected Audio Hi/Lo Indication circuitry indicates whether or not the RF detector is working properly. It is set up to measure the peak of a single tone modulating signal at 50% modulation. If the peak is greater than the acceptable high level or less than the acceptable low level then an appropriate indication is made. A high or low indication could mean that the detector or leveling loop are functioning improperly or that the RF calibration level has become uncalibrated.

4.3.11 RF MODULATOR BOARD OPERATION

The RF Modulator Board circuitry provides two basic functions: AM modulation and automatic RF leveling. Both functions are achieved using variable gain amplifiers (VGA's). Temperature compensation is also provided to correct for gain variations of RF amplifiers with temperature.

The audio signal, conditioned to achieve a desired percent modulation by the audio board, is applied to the Modulating Signal Temperature Compensation circuitry. The modulating signal is then applied to the first VGA's gain control input to amplitude modulate the CW RF signal applied to the RF input of the RF modulator. The Modulating Signal Temperature Compensation network removes the gain temperature dependence of the first VGA stage.

The second VGA amplifier is part of the automatic leveling loop. It is followed by three stages of amplification which boost the signal to the desired level. At the output of the final fixed gain amplifier, a portion of the signal is detected by a temperature stable detector.

The Temperature stable Detector circuitry detects the modulation of the RF carrier and corrects for the temperature dependence of the detector diode. The detected modulating signal is then applied to the Detected Audio Hi/Lo Indication circuitry and to the Low Pass Filter & Integrator circuitry. The Detected Audio Hi/Lo Indication circuitry is on the audio board and is discussed above. The LPF & Integrator circuitry filters and integrates the detector output to determine its average DC level. This signal is an input to the RF leveling output leveling loop.

In the Scaling & RF Level Set circuitry, the DC signal from the LPF & Integrator circuitry is used in conjunction with the voltage reference provided on the audio board to generate the gain control voltage for the second VGA. This closes the RF leveling loop. If the detected RF output level is too high, the gain control voltage on the second VGA is reduced; if too low it is increased.

The RF High/Low Indication circuitry indicates the ability of the second VGA to level the RF output power. If the output level falls to a low level which is very small due, for example, to an amplifier malfunction, the gain control voltage would go to its maximum value in attempting to restore the RF output level. Similarly, if for some reason the detected RF output level was exceedingly high, the VGA control voltage would drop in attempting to lower the RF level. In either case, the indication circuitry would set bits indicating the leveling loop is out of its control limits.

NOTE:

The RF level high/low indication bits do not mean that the RF output power is within a certain window of its desired level. They simply indicate proper operation of the leveling loop in leveling RF output level.

4.3.12 PROGRAMMABLE STEP ATTENUATOR CIRCUIT

The programmable step attenuator provides control over the output power level. It provides the ability to have outputs from +7 dBm to -120 dBm in 1/10th dB steps. The drivers for each of the step attenuators, along with the 1/10th dBm control circuit, are found on the audio board.

4.3.13 SYNTHESIZER

The synthesizer module consists of the REFERENCE/CONTROL board, the RF/OUTPUT board, the MAIN VCO board, and the 400 MHz VCO board. A block diagram of the module (JPN 40-9520-52) is located in Section V of this manual.

Referring to this block diagram, frequency generation begins with the 10 MHz Temperature Compensated Voltage Controlled crystal Oscillator. The output of this frequency standard is buffered and sent throughout the REF/CONTROL board, and to the RF/OUTPUT board as the reference for the 400 MHz phase lock loop. Within the REF/CONTROL board, this 10 MHz is transformer coupled to the TIME BASE, 10 MHz OUTPUT jack, buffered and sent to a 10 MHz phase detector, buffered and sent to the microprocessor and Direct Digital Frequency Synthesizer circuitry, and buffered and sent to the mixer circuit.

The 10 MHz sent to the reference phase detector, allows an external 10 MHz reference to be used as the frequency standard. A signal sensed at the 10 MHz INPUT causes the output of the Low Passed filtered phase detector to be applied to the voltage control of the TCVCXO, thereby phase locking the internal standard (TCVCXO) to the externally applied reference signal.

The 10 MHz is used by the microprocessor and direct digital frequency synthesizer as basic operating clocks. The microprocessor interfaces with the NAV 2000R system buss and generates the control signals required to program and monitor frequency generation. The Direct Digital Frequency Synthesizer clocks into the Digital to Analog Converter values at a 10 MHz rate that produces a sine wave of 700 kHz plus or minus 1.2 kHz with millihertz of resolution.

The output of the DAC is passed through a 1 MHz low pass filter and then to a mixer. Here it is mixed with the 10 MHz to produce 10.7 MHz plus or minus 1.2 kHz. The filtered output of the mixer is passed to the RF/OUTPUT board where it is used as the reference for the MAIN phase lock loop.

The RF/OUTPUT board consists of a MAIN phase lock loop, RF divide by two and divide by four circuits, harmonic suppression filter networks, 400 MHz phase lock loop, low band mixer, and an output leveling circuit.

The Main phase lock loop uses a PLL IC which incorporates reference dividers, a dual modulus prescaler, divide by A and N counters, and a digital phase detector. The 10.7 MHz reference, from the REF/CONTROL board, is divided by 214 to produce an internal 50 kHz reference for the phase detector. The Main VCO output is divided by the divide by 64/65 prescaler and the A and N counters. This produces a total divide ratio of from 4500 to 9125, thus the VCO frequency produced will vary from 225 MHz to 456.25 MHz. The 50 kHz phase detector reference allows the PLL to be programmed in 50 kHz steps. To produce the smaller 10 Hz steps, the 10.7 MHz is skewed up or down. As described previously, this is done by the Direct Digital Frequency Synthesizer on the REF/CONTROL board.

The Main Loop is only required to produce a frequency range of 225 MHz to 456.25 MHz for the NAV 2000R synthesizer to generate output frequencies of 150 kHz to 450 MHz. For output frequencies of 225 MHz to 450 MHz, the Main Loop output is used directly. For output frequencies from 112.5 MHz to 225 MHz, the Main Loop output is divided by two. For output frequencies of 56.25 MHz to 112.5 MHz, the Main Loop output is divided by four. To produce the Low Band range of 150 kHz to 56.25 MHz the Main Loop output is mixed with a fixed 400 MHz.

The selected output, direct, divided by two, or divided by four, is passed through an appropriate low pass filter to reduce harmonics. There are two filters per octave. The approximate corner frequencies of each filter and the output frequency range passed by each is listed below. For output frequencies of 56.25 to 75.5 MHz a 90 MHz LP is selected. For output frequencies of 75.5 to 112.5 MHz, a 130 MHz LP is selected. For output frequencies of 112.5 to 155 MHz, a 180 MHz LP is selected. For output frequencies of 155 to 225 MHz, a 260 MHz LP is selected. For output frequencies of 225 to 310 MHz, a 375 MHz LP is selected. For output frequencies of 310 to 450 MHz, a through path is selected.

The 400 MHz Loop is used to generate a 400 MHz LO signal for the Low Band Mixer. Applied to this loop phase detector, are the 10 MHz reference from the REF/CONTROL board and the output of a divide by 40 RF prescaler. The output of the phase detector is low pass filtered and applied to the tuning line of the 400 MHz VCO.

The output of the 400 MHz VCO is buffered and applied as the LO of the balanced Low Band Mixer at a level of 7 dBm. The Main VCO output is padded down and applied to the Mixer RF input. The IF output of the Mixer is filtered by a 68 MHz low pass filter and amplified. The resulting output is the Low Band frequency of between 150 kHz and 56.25 MHz.

The 400 MHz VCO may be switched on or off. This VCO operates only during Low Band frequency generation.

The Main VCO is actually four VCO's, each covering only a part of the Main VCO frequency range. The output of each VCO is combined, buffered, and split. Only one of the four VCOs operate at one time. The outputs, are split three ways; to the PLL buffer and two, to an output buffer.

All of the possible outputs are combined and then passed through a 500 MHz LP filter. Following this filter is the leveling loop. The leveling loop is composed of a voltage controlled attenuator, an Amplifier, and a diode detector and error amp. This loop maintains the output level of the synthesizer at -20 dBm.

4.3.14 REVERSE POWER PROTECTION MODULE

The Reverse Power Protection (RPP) module provides a means for interruption of the RF path between the unit under test (UUT) and NAV 2000R output. Should a high RF signal be fed to the NAV 2000R output connector, while testing a transceiver for instance, an internal switch in series with the RF output will open. In addition to RF protection, the RPP module also contains a DC block which will prevent damage to the output stage if connected to a circuit operating at a DC potential.

The open circuit condition is indicated by a WARNING! message on the instrument display and by setting an IEEE-488 status word error bit. Three methods are available for resetting the RPP module once it has been tripped; pushing the CLR key, sending a reset command via the IEEE-488 bus or momentarily switching AC power off.

4.4 NAV 2000R SOFTWARE

Following is a short description of the NAV 2000R basic operating software. The software versions are displayed upon power up.

The operation software of the NAV 2000R resides on the system computer board. This software controls all other boards and modules within the NAV 2000R. The display characters and fields are defined by the software which writes the display information into Video Ram. Hardware, under software control within the system computer board, outputs the contents of Video Ram to the display. The keyboard interrupts the main program. Interrupt handling routines receive and pass the key value to the main program. The main program processes the new information. Interrupts from the GPIB bus are handled similarly.

The software on the system computer board passes control words to and reads status from, the DSP board and the Modulator assembly.

The information passed to the Modulator tells the modulator the % MOD to output, and the audio source and conditioning to be used. The status passed back from the modulator allows the system software to monitor the modulator operation.

The information passed to the DSP board tells the DSP board the operational mode, the audio frequencies to be generated, the phase relationship of these signals, the amplitude relationship of these signals, and Morse code characters and timing to be used. The status passed back from the DSP allows synchronization of variables passed and allows the system software to monitor the DSP operation.

The DSP software is downloaded from the system computer on power up. The DSP runs this software to actually generate the audio signals.

4.4.1 SELF TEST

The NAV 2000R performs a self test during power up. This self test includes the following checks and measurements.

The CPU board reads, calculates, and compares the calculated checksum with the stored checksum within EPROM, EEPROM (UV BOOT and DYNAMIC ROM), and Battery RAM. It also writes and reads patterns to the operational RAM (STATIC) to verify its functionality. The CPU then writes and reads the DSP board RAM (PROGRAM BOOT ram) to verify it. The DSP program is then transferred to the DSP RAM. Upon the CPU releasing the DSP reset, the DSP processor reads, calculates and compares a stored checksum with the calculated checksum of the SINE look up ROMs residing on the DSP board. The DSP processor writes these test results into a status register. The CPU board displays the results of the ROM and RAM tests on the SYSTEM DIAGNOSTICS NAV 2000R display.

The MODULATOR is checked next. To do this the CPU board tells the DSP board to generate a single 1000 Hz tone, and tells the modulator to produce a depth of modulation of 50.0 %.

The CPU board then reads the status bits of the modulator to verify the following: 1) Audio level outputted by the DSP and received by the modulator is the proper level. 2) Recovered audio out of the Modulator diode detector is proper for 50.0 % AM modulation. 3) The AGC control voltage of the RF OUTPUT leveling circuit is within it normal range. The CPU then displays these results on the SYSTEM DIAGNOSTICS display.

For all Modulator tests to pass, the modulator must have the RF IN signal applied at approximately the proper level and within the NAV 2000R frequency band. With no RF applied the RF level and detected Audio test will fail indicating outputs too low.

NOTE:

The self test discussed above is fully preformed during normal operation. But if the FORCE BYPASS ON POWER UP configuration is selected, a shortened self test is performed. The last two steps of the MODULATOR tests; DETECTED AUDIO and RF LEVEL, are not performed. With RF switched off from the modulating circuitry these tests will always fail.

4.4.2 CALIBRATION

When the calibration procedure is entered, the system computer is directed to setup the DSP board and Modulator for each step of the procedure as it is displayed and followed.

For the first steps of internal audio, and Modulation alignment, the system computer tells the DSP board to generate a 1000 Hz sine wave, and tells the Modulator to set % MOD to 50.0% and RF level to -10 dBm. During the RF level alignment, the system computer turns off audio from the DSP board. During the External Modulation alignment, the DSP is told to turn off all internal audio, and the modulator is told to turn the external MOD AUDIO INPUT on.

During VOR Bearing calibration, external MOD audio input is switched off, and the DSP board is told to generate a VOR composite audio with a bearing of zero degrees. Modulation is set to the nominal VOR levels. The error value loaded by the user is used to calculate a calibration factor which is stored within the system computer and passed to the DSP board. The DSP shifts the phase of the VOR signal by this calibration factor. This factor will be used during all VOR generation until it is changed by the NAV 2000R user within the CAL procedure.

Finally, upon going to the next and last calibration step, the DSP board is told to generate a 1000 Hz tone.

Upon completing CAL, the NAV 2000R will return to the Utility Menu.

4.4.3 MEMORY USAGE AND INITIALIZATION

The NAV 2000R internally contains non-volatile memory to maintain its setup after it is powered off. System configuration, current and registered parametric settings, and calibration data constants are some of the items stored within the battery backed RAM. The non-volatile memory module, U14, is an integrated battery backed-up static RAM module. If, for whatever reason, the battery RAM module is replaced, the part must be re-initialized.

To initialize the part, the user must: 1) Re-initialize the 49 registers to update the data integrity of each. 2) Re-initialize the unit "on-time" clock and number of times unit has powered up counter. 3) Re-configure the NAV 2000R to the user's preference. 4) Re-calibrate the unit to insure good calibration constants.

NOTE:

Dependent upon the BATRAM's initial data settings, the NAV 2000R may power up with a blank screen and a "** BOOT ROM **" annunciation toward the bottom portion of the display. If this occurs, press the 120 degree bearing "hot key" to force the unit to complete the power up, which will cause the TSD logo to be displayed and the unit power-up self test to execute, before proceeding.

1) Re-initialize the registers to update data integrity:

In the event the battery RAM is replaced with a new part, the power up self test of the NAV 2000R will fail the CPU RAM register memory test. This tells the user that one of the setup registers contains bad data. To re-initialize the registers, one could save the current paged parametric data to each of the available locations by using the STO key (store) function for each of the available locations. This would rewrite every register insuring good data for each. However; there is another way to clear the registers from within the Utility Menu. Push and hold the ADF mode switch to request the unit to list the utility menu options. Option 7, SET ALL REGISTERS TO DEFAULT, will automatically clear all registers to factory default settings in one step. After pressing option 7, the system will require you to verify the clearing procedure by pressing the CLR (clear) key.

2) Re-initialize the unit on-time and power on counter:

From within the Utility Menu option 5 selection, DISPLAY SYSTEM STATUS, the amount of time and number of times the unit is powered on is displayed. With a new battery RAM module, these values need re-initialization. This is accomplished by pressing, and holding down the 120 degree bearing "hot key" for approximately two seconds.

3) Re-configure the NAV 2000R to the user's preference:

The user can now set the NAV 2000R to their desired configuration. This could be to set the GPIB address and External Modulation settings.

4) Re-calibrate the unit to insure good calibration constants:

Since the unit's calibration constants are contained within the battery RAM module, the unit must be re-calibrated to insure the unit is producing the desired signals.

4.5 DETAILED CIRCUIT DESCRIPTIONS

The following sections provide detailed circuit descriptions and reference the schematics of Section V.

4.5.1 MOTHERBOARD CIRCUIT DESCRIPTION

The motherboard, located at the front of the card cage assembly, contains printed circuits that connect the plug in assemblies; the CPU board, the DSP board, the Modulator module, and two optional cards. All signals going between these assemblies, and to and from the front panel keyboard, are routed through the motherboard.

Power supply voltages are connected to the motherboard at terminal block TB1. These voltages are +15Vdc, +5.2Vdc, and -12Vdc. The 5.2Vdc voltage at TB1 -2 and -3 is split between two filters formed by inductors L1 and L2 and capacitors C1, C2, C3, C4 and C5. These filter networks help isolate a +5v digital power bus from a +5V analog power bus. The -12Vdc voltage at TB1-1 is routed to the Modulator assembly mating connector J105, to Expansion connector J106, and to two voltage regulators U1, and U2. Regulator U1 drops the -12volts to produce the -5 volt power bus. Regulator U2 drops the - 12 volts to produce the -5 volt digital power bus.

4.5.2 SYSTEM COMPUTER (CPU) BOARD CIRCUIT DESCRIPTION

The System Computer Board is centered around the versatile 80C188 microprocessor and controls the operation of the NAV 2000R. Reference JPN Drawing 02-5742-00 located in Section V of this manual. The following sections discuss the System Processor Circuits.

The processor, U1, controls the keyboard, display, DSP processor board, RF Modulator Module, and GPIB communications, and system timing. The processor uses memory mapping to address various hardware devices. A feature of the system computer board is its use of battery backed RAM and EEROM (Electrically Erasable Read Only Memory). The battery backed RAM enables NAV 2000R to remember its last state through power ON/OFF cycles and provides a simple to use storage area for calibration constants and instrument test setups.

All board timing is derived from the processor clock. Crystal Y1, and capacitors C1 and C2 set the clock frequency to 16.384 MHz. Inverter U9 buffers the processor oscillator to drive all Mother board circuits requiring a clock.

The CPU board interfaces with the keyboard by means of seven lines. These consist of six key value lines KD0-5 and a key is pressed indicator KEYIN. KD0-4 lines are latched within the keyboard assembly while KD5 representing a bank select is latched on the CPU board by U38, clocked by KEYIN. KEYIN is applied to U28. U28 will generate a interrupt request to processor U1 whenever KEYIN goes high. The interrupted processor then reads the key value through tri-state buffer U39. KEYIN inverted by U16 is also applied to U28. A low at pin 34 of U28 starts a timer within U28. If a key is held for longer then the programmed times additional interrupts will occur.

Processor U1 determines and drives the NAV 2000R display. Timers within U1 generate the horizontal sync and vertical sync for the display. The values and fields displayed are generated by software within the processor and written to video rams U33 and U34. Interface to the processor bus is accomplished by ICs U30, U31, and U32. The video rams are dynamic, and need RAS and CAS timing for data writes and reads. Programmable logic IC U30 generates this timing. Quad 2 to 1 decoders U31 and U32 converts the 16 bit processor address into the two 8 bit row and column address. The video ram has two ports, the one discussed above and serial ports. Programmable logic within U35 generates the video ram output timing. Demultiplexer U36 converts the 8 serial ports of the two video rams into a single serial video data output. Hex D flip/flop U37 synchronizes the Video data, vertical and horizontal syncs to the display clock.

Information is passed between the CPU board and other circuitry by means of a parallel bi-directional bus. This bus consists of eight data lines which are multiplexed with the eight lower address lines, five additional address lines, address latch enable, a direction line, read and write, four request lines, and a bus granted line. The CPU board controls all bus transactions. When the CPU board needs to send or receive a byte of information to or from one of the other cards, it pulls the bus request line going to the card of interest low. IC U7 selects one of the four cards based on processor's (U1) address lines A13 and A14. The card addressed replies by pulling BUS GRANTED low. BUS GRANTED is common to all cards. This wired OR pull down is pulled to +5 v only through pull up resistor R9 on the CPU card. Once a bus request is asserted, processor U1's bus cycle will not complete until either BUS GRANTED is returned or a time out circuit on the CPU board expires. As can be seen on the CPU board schematic, inverted BUS GRANTED is ORed with monostable multivibrator (U15) output and applied to the ready pin of processor U1. Monostable multivibrator (U15) is retriggerable. A delay in the return of BUS GRANTED, extends the read or write signals allowing the board addressed to set its own bus speed. The timeout furnished by monostable multivibrator (U15) is nominally 5 microseconds. Therefore, a wide range of board interfaces may be handled. Tri-state buffers U20 and U21 outputs are turned on only during bus requests isolating the processor bus from the external bus except during external bus transactions. Bi-directional bus transceiver U19 is similarly controlled, with the external bus isolated except during external bus operation.

4.5.3 DSP BOARD CIRCUIT DESCRIPTION

The DSP board consists of a digital signal processor (U1), a digital filter (U7), a D/A converter (U15), a lowpass filter (1/2 U17), a buffer amplifier (1/4 U17), and interface logic (U8, U9, U10) to talk to the CPU board through connector J1 (see JPN schematic 02-5743-10 for DSP board circuit diagram).

The DSP processor runs at 10.199 MHz. This is obtained by dividing the clock of the digital filter U7 by 2. The DSP generates a 2.5 MHz serial clock (SCLK1) for the bit clock input (BCI) of the digital filter. The DSP also outputs a 79.68 KHz transmit/receive frame sync pulse. This is divided by U5 to obtain 39.84 KHz. This is applied to the SDSY input of the filter which controls the serial data word rate.

A crystal between XI input and XO output of the digital filter and a capacitor from XO to ground produces the digital filter's 20.398 MHz clock frequency. This frequency is divided and used to clock the DSP processor. The bit clock input (BCI) is 2.5 MHz, which is 64 times the sampling frequency of 39.84 KHz. The 8 times oversampling filter causes the image frequency to occur between 8Fs +/- Fs/2, where Fs is the sampling frequency. The image frequency occurs between 300 KHz and 340 KHz due to the oversampling frequency of 320 KHz. A 3 pole analog filter is used following the D/A converter, to remove unwanted signal outside the desired band of 0 to 18 KHz. Without a digital filter, the image frequency would occur between Fs +/- Fs/2, which are between 20 KHz and 60 KHz. This would require a higher order lowpass filter with a steep roll off between 18 KHz and 20 KHz.

The Bit Clock Output (BCO) of the digital filter is applied to the Clock Input (CLK) of D/A converter U15. The Word Clock Output (WCO) of the filter is connected to the latch enable (LE) pin of the D/A. The Left Channel Data output (DLO) is applied to the serial data input of the D/A converter.

The output of the D/A converter passes through a RC filter consisting of R5 and C1. Following this is a two pole low pass filter consisting of two sections of a quad operational amplifier, U17. The filtered output is available for use by the audio board at pin 14 of connector J1. A buffer, consisting of a section of U17 and associated discrete components, provides the output at the BNC connector J5. The amplitude of this output is adjustable by the potentiometer R9.

The DSP processor uses two 8 bit ROMS, U11 and U12 to read the 16 bit sine lookup table. U13 is a 8-bit RAM used as a boot ROM on power up and data memory RAM after booting is completed. The 14 bit DSP address bus is buffered by U9 and U10 and sent to connector J1 to be shared by the CPU board. The middle 8 bits of the DSP data bus is buffered by U8 and connected to J1 to allow CPU board access to the data bus. The CPU board's multiplexed address and data busses are connected to both U8 and U9. The bus request input (BR) and the bus grant output (BG) of the DSP processor are ORed, inverted and applied to the J input of U6. The Q output of U6 is in sync with the DSP clock. This is applied to the base of Q1. The R-C combination of R4 and C68 speeds up the switching time of Q1. The output at collector Q1 is used by the CPU board as a bus grant signal.

4.5.4 RF MODULATOR MODULE CIRCUIT DESCRIPTION

This section contains an operational description of the RF Modulator Module Circuitry. The Audio Board, RF Modulator Board and Variable Attentuator are each covered separately.

4.5.5 RF MODULATOR MODULE BLOCK DIAGRAM

JPN Drawing 40-9520-51 located in Section V shows a block diagram of the RF Modulator Module. The current discussion on the operation of the Audio Board covers the Audio Board features shown on the block diagram. Also refer to the Audio Board schematic JPN Drawing 02-5761-20.

4.5.6 RF MODULATOR MODULE BUS INTERFACE CIRCUITRY (AUDIO BD-A1)

The RF Modulator Module interfaces to the NAV 2000R via system bus connector, J1. RN1 and RN2 provide pull ups to the system data bus, address bus, and control lines. The bus request is the system bus request 1. The features of the module can be addressed using system bus address lines A8 through A11. MOD AUDIO 1 is an internal audio input which is supplied from the system DSP Board. U1 is a bus transceiver which controls the direction of the data on the bus and also provides bus driving capabilities. U3 is a 3 to 8 line decoder which selects the RF Modulator Module component to be accessed. A description of the functions addressed using the decoder is listed below as well as bus request / bus grant circuitry.

ADDRESS 0: A read of address 0 of U3 (output Y0) reads in the status word of the RF Modulator Module. High bits in this status word indicate error conditions as described in the Table below.

Data Bit	Description
0	Internal or External Modulating Audio too high
1	Internal or External Modulating Audio too low
2	RF output level unleveled and too high
3	RF output level unleveled and too low
4	Peak of detected audio for 50% modulation of a single tone too high
5	Peak of detected audio for 50% modulation of a single tone too low
6	N/A
7	N/A

A write to address 0 of U3 writes the MSB byte of the word, which sets the attenuation of variable attenuator (U7), which controls percent modulation. A write to address 1 of U3 writes the LSB byte of the percent modulation word to the percent modulation variable attenuator.

ADDRESS 2 & 3: Writes to addresses 2 and 3 of U3 write the MSB and LSB of the RF Fine tune level attenuator (U8), respectively. Use of this feature is reserved for future releases.

ADDRESS 4: Latches the byte that controls the programmable step attenuator into the attenuator driver U10.

ADDRESS 5: Latches a byte that controls the DISCRETE features of the module U11. Setting bit 0 of U11 high will enable external modulation to be AC coupled, and when cleared low, DC coupling. Setting bit 1 of U11 high enables external modulation and turns it off if cleared low. Setting bit 6 of U11 selects LOW BAND operation of the leveling loop.

To transfer data to and from the RF modulator module, the bus request line is held low. The bus grant line returns an active low bus grant signal after a short time indicating that the module is ready for reads or writes to its valid addresses. The bus grant is open collector as it is for all modules in the NAV 2000R. CR9 enables the acceptance and release times to have two different time constants. C46 allows high speed edges to bypass R4.

4.5.7 EXTERNAL AUDIO CONTROL

External modulation can be turned ON or OFF. The External Modulation jack, J3, is normally calibrated for a signal with AC component of 1V peak. DC coupling is not used within the NAV 2000R.

Since external and internal modulation are summed, an external signal may be added to the internally generated modulating signals. However, the circuitry which indicates modulating level high/low, will only indicate that their sum is high or low. During the External Modulation Mode, EMM, all internal audio is turned off. Adjusting an external modulating signals until the modulating high/low indicators show that the modulating signal is of an acceptable level will cause the output to match the selected modulation level.

4.5.8 INTERNAL & EXTERNAL MODULATION SUMMING

During the five primary MODES, which are selectable by means of the five MODE buttons, internal and external audio can be summed. The internal and external modulating signals are summed in one of the op amps of U12. The output of the summing amplifier, U12 pin 7, is the input to the Audio High/Low Indication circuit and the % modulation Level Set Attenuator. However, as previously mentioned, the modulating high/indication circuitry will only indicate whether or not the peak of the modulating signal is within a small percentage of a calibrated level, which is the level at which internal audio is maintained. Therefore, a summed internal plus external signal is not monitored by this circuitry.

4.5.9 AUDIO HIGH/LOW INDICATION

The Audio High/Low Indication circuitry is on JPN Drawing 02-9520-00. This window level comparator monitors the positive peak level of the sum of the external and internal modulating signals to insure they are within acceptable limits. There are three possible states of the comparator:

[1] Inadequate audio level - U14 pin 12 (Q bar) will be high; pin 13 will be low,
[2] Acceptable audio level - U14 pins 12 & 13 are both low, and
[3] Excessive audio level. - U14 pin 13 will be high, pin 12 will be low.

If the positive peaks of the modulating signal do not exceed the bias on U13 pin 7, pin 1 will remain high and fail to trigger U14 pin 9. Therefore, U14 pin 12 (Q bar) will remain high, indicating a low modulating audio level.

If the positive peaks are high enough to produce pulses at U13 pin 1 but not so high as to exceed the DC bias at U13 pin 5 (a higher level than pin 7), pin 1 will generate triggers to U14 pin 9 and U14 pin 12 will go low. U14 pin 13 will remain low. With both U14 pins 12 and 13 low, an acceptable modulating signal level is indicated.

If the positive peaks of the modulating signal exceed the DC bias on U13 pin 5, pin 2 will generate trigger pulses at U14 pin 1, causing pin 13 to go high. This indicates a high modulating audio level. At the same time, of course, triggers from U13 pin 1 will cause U14 pin 12 to be at a low state.

The RC time constants in both sections of retriggerable one-shot U14 are sufficiently long that the outputs will remain triggered at the lowest anticipated modulating frequency, if signal levels at the inputs to voltage comparator U13 exceed bias levels for any fraction of the positive-going modulating waveform.

4.5.10 % MODULATION LEVEL SET ATTENTUATOR

This system attenuates the audio level from the summing amplifier to achieve the desired modulation percentage. It is comprised of digital-to-analog converter (DAC) U7, parts of gates U5 and & U6, and part of op amp U9.

When address decoder U3 generates outputs on its 0 or 1 output lines, bus data forms the MSB or LSB input, respectively, to multiplying DAC U7. Audio from the summing amplifier is applied to the Vref input of U7.

Attenuation data written to U7 causes attenuation to be applied to the modulating audio signal. For example, when the bus data written to U7 causes an attenuation factor of .50 to be applied to the modulating audio, the resulting percent modulation will be 50%. For 99% modulation data is written to the attenuator to provide a 0.99 attenuation factor to the audio modulating signal. In this way, modulation percentage may be controlled to the nearest percent by the bus data. There is a direct relation between the data written to the attenuator and the resultant attenuation. The system computer stores the data to be written to the DAC to achieve the various attenuations, which produce the various % modulations.

The DAC audio output is buffered by part of op amp U9 and applied to the percent modulation centering and calibration circuit.

4.5.11 % MODULATION CENTERING & CALIBRATION

The % Modulation Centering & Calibration circuitry adds the appropriate DC offset level to the audio modulating signal and enables calibration. The DC level from the voltage divider of R41, R42, and R43 is added to the audio modulation signal. The voltage divider is sourced by the stable +5.0 Volt voltage reference, U15. By adjusting R42, the DC level can be set.

The DC level setting is not extremely critical due to the use of a VGA (variable gain amplifier) in the RF modulator. It is important, however, to bias the modulating signal near the center of the VGA gain control input range to optimize the use of the available dynamic range. During Calibration, R42 is adjusted so that 0.85 Volts DC is present on pin 17 of J2 for a 1 kHz tone at 50% modulation. This ensures that the VGA gain control input is biased at its optimum setting.

The modulation level calibration pot, R46, is adjusted during calibration so that a modulation analyzer indicates 50.0% modulation for a 1kHz tone modulating a CW carrier at 156 MHz. An op amp, part of U9, is a simple inverting buffer that produces a positive polarity signal for the percent modulation temperature compensation circuitry on the RF modulation board.

4.5.12 VOLTAGE REFERENCE

The Voltage Reference U15 provides a stable +5.0 V DC voltage which is used to calibrate and stabilize the NAV 2000R modulation performance. It is used by the Detected Audio Hi/Lo Indication, Audio High/Low Indication, RF Level High/Low Indication, RF level set, % Modulation Centering & Calibration, and Detector Bias networks.

In the Detected Audio Hi/Lo Indication, Audio High/Low Indication, and RF Level High/Low Indication circuits use the voltage reference to calibrate the levels at which the indications will occur. The % Modulation Centering & Calibration circuitry uses the voltage reference to center the DC operating point of the modulating signal. The RF Level circuitry uses the voltage reference to derive a fine tune correction voltage which is then summed with the original voltage reference and fed to the RF leveling loop circuitry on the RF Modulator Board.

4.5.13 DETECTED AUDIO HI/LO INDICATION

This circuit generates an error signal if the output of the RF detector on the RF modulator board is not within acceptable limits. The error status is presented to the system bus through bus driver U2 and bus transceiver U1.

This window comparator circuit checks the operation of the RF leveling loop and the RF detector and is valid only for a single tone at 50% modulation. It is comprised of two sections of quad comparator U13 and both sections of retriggerable one-shot U17.

When a 50% modulated signal is detected, its positive peak must fall between allowable limits, as set by divider network R51-R53. If the peak is too high or too low, the appropriate detected audio high or low error status will be sent to the system bus.

This circuit is identical to the Modulating Audio High/Low circuit described in Section 4.5.9 except that the limits are not as stringent.

4.5.14 PROGRAMMABLE STEP ATTENTUATOR CONTROL

The Programmable Step Attenuator Control consists of a latchable relay driver U10 and decoder gating for the strobe input. Each high bit of the latched attenuation word activates one discrete attenuator section. These discrete attenuators consist of 1 dB, 2 dB, 4 dB, 8 dB, 16 dB, 32 dB, and 64 dB pads. The 64 dB attenuation step is actually two 32 dB attenuator sections that are selected together. Otherwise, separate drive lines control each section.

To achieve a given level of attenuation between 0 dB and 127 dB, a combination of the above attenuation values is used. The series resistors R33 through R40 provide the necessary voltage drop from +15 V to +12 V as required by the individual attenuator relay coils. CR1 through CR8 provide a discharge path for the negative current spike when the relay coils of the individual attenuators are de-energized.

To provide 1/10th dBm control, the voltage reference circuit to the modulator is varied using the digital to analog (DAC) device U8 to slew the reference voltage.

4.5.15 RF MODULATOR BOARD

The RF Modulator Board amplitude modulates (AM) a CW RF carrier from an external RF source and provides a leveled RF output. The audio modulation signal that modulates the applied RF carrier, is generated by the DSP or an external source module. The audio modulation signal is conditioned by the audio board to achieve RF modulation. The leveling loop ensures that the output of the RF Modulator Board is always at a fixed RF level. Temperature compensation circuitry maintains stable performance over the operating temperature range. The schematic drawing number for the RF Modulator Board is 02-5951-00.

4.5.16 MODULATING SIGNAL TEMPERATURE COMPENSATION NETWORK

The op amp U5A is included in the temperature compensation network for the modulation signal. It is necessary due to the temperature gain dependence of the VGA (Variable Gain Amplifier) gain control input. The slope of the gain control voltage vs. gain changes with increasing temperature: with higher temperature the slope increases.

Suppose 50% modulation using a single tone is achieved at room temperature. After operating the NAV 2000R for several hours in a cabinet, the temperature increases by 25 C. Without temperature compensation, the modulation percentage would become higher than 50%. To compensate for this gain/temperature dependence, a thermistor controls the gain of a non-inverting op amp that is in the signal path of the modulating audio to the VGA gain control input. U5A uses RT1, R28, and R29 to form gain given by

$$G(T) = [1 + [R29/[RT1(T)+R28]]$$

where RT1(T) is a function of temperature. If the VGA gain is a function of temperature and input control voltage and is written,

$$Gvga(T,Vagc)$$

then, it follows that the resultant gain be temperature independent if adequate compensation is achieved, or

$$Gcomp(Vagc) = Gvga(T,Vagc)*G(T).$$

4.5.17 AUDIO MODULATED AMPLIFIER

The audio modulated amplifier amplitude modulates a CW carrier at its RF input with the audio modulation signal delivered by the Modulating Signal Temperature Compensation network.

The CW carrier at pin 3 of U1 is at a level of about -30 dBm, at RF frequencies from .15 MHz to 450 MHz. Operating the VGA at -29 dBm input minimizes the audio distortion of the modulated output. The required input to the RF Modulator is -20 dBm. After the 9 dB pad, the RF power at the VGA input should be about -29 dBm.

The audio modulating signal applied to the AGC gain control input (U1 pin 8) varies the gain of the amplifier in proportion to the audio signal level, generating amplitude modulation. To optimize the available AGC voltage dynamic range of U1, a DC level, at room temperature of around 0.25 Volts is maintained. This level is adjusted by R42 in the modulating centering circuit on the audio board.

About 0.9 Volts of gain control voltage at U1 pin 8 produces maximum gain (for all temperatures). For 100% positive modulation, the instantaneous peak control voltage, referenced to the DC operating point of will be doubled. The control voltage directly relates to voltage gain so now the peak RF level will be 6 dB above the average RF level. Similarly, for 100% negative modulation, the null of the modulating waveform should extinguish all RF level. This is approximated since the audio modulating signal will, for 100% modulation, swing from .25V to .5V for the peak and from .25V to 0.0V for the null.

With nearly 0.0V applied to the AGC input, there is maximum attenuation of the input CW RF carrier. Although the RF is not completely cut-off, it is adequately attenuated. Decreasing the DC bias point of the modulating signal would be to use less of the linear dynamic range of the VGA. It is important that the VGA be operated in its linear region to avoid audio distortion. Using a lower bias point would mean that the audio signal would need to be smaller and thus noise would become more significant resulting in increased distortion.

There are two RF inputs to the VGA and two RF outputs for balanced operation, if desired. In this application, the RF signal is applied unbalanced with the other input terminated in a 50 Ohm resistor. This termination provides the same impedance as found on the RF input. The output is taken balanced and feeds the RF Leveling Amplifier balanced inputs through a 16 dB pad.

With Vagc, the gain control input, biased at about .25 volts, the average RF power gain should be about 11 dB so that the carrier level of the modulated output is at a level of about -22 dBm.

4.5.18 RF LEVELING AMPLIFIER

The RF leveling amplifier is used to level the output power of the RF Modulator board. Without leveling, the RF level would vary due to the RF frequency response and temperature dependence of the RF circuitry. The leveling amplifier receives a gain control voltage that corrects for differences in output power level from a set level. The leveling loop can correct for output level errors up to +/-5 dB from the set level.

The nominal RF carrier power level received at each of the balanced RF inputs (U2 pins 3 and 5) is about -35 dBm. This input level minimizes audio distortion at the output. The nominal output of the first modulated VGA with a DC bias of 0.25 volts on its Vagc input (U1 pin 8) is about -22 dBm. The 14 dB balanced pad attenuates the signals delivered to each of the inputs of the RF leveling VGA to -36 dBm.

With the RF leveling VGA nominally biased at 0.4 volts (U2 pin 8) the gain will be about 17 dB. Thus, the carrier level at the output will be near the -19 dBm level. For a 100% modulated carrier, this means that the peak will be at the -13 dBm level nominally.

Since variations in gain and frequency response of the three power boosting amplifiers may be as much as 5 dB, the peak of the RF signal level at the output of the RF Leveling VGA could be as high as -8 dBm. This is only 5 dB below the output compression point of this amplifier but has no appreciable effect on distortion.

The RF output, of the RF Leveling Amplifier is single ended. The other output is match terminated in 50 Ohms.

4.5.19 FIXED GAIN AMPLIFIERS

The two fixed gain amplifiers on the RF Modulator Board boost the nominal RF carrier to 0.0 dBm at the output.

The RF level from U2 is attenuated by a 6 dB pad and will be nominally -25 dBm at the input of the first Fixed Gain Amplifier. Remember that due to automatic leveling, this level may vary by +/- 5 dB. The first Fixed Gain Amplifier offers about 22 dB of gain with a compression point of about 10 dBm. The uncompensated frequency response should be approximately 1 dB. The nominal output of this amplifier is about -3 dBm. Note that L1 and L2 have been selected to improve the frequency response of the amplifier.

The second Fixed Gain Amplifier offers 9 dB of gain with a +16 dBm 1 dB compression point. The output of this amplifier will have a nominal carrier level of about +6 dBm. At the output of the second Fixed Gain Amplifier, a small portion of the RF power is sent to the Detector and the main power path is attenuated by a 3 dB pad and sent to the RF Modulator Board output connector E2.

At the output of the RF modulator board, the nominal carrier level should be at the -3 dBm level. Note that the programmable step attenuator and output relay network have about -3 dB insertion loss so that there will be a +7 dBm carrier level at the output of the NAV 2000R - if no other attenuation is inserted by the programmable attenuator.

4.5.20 DETECTOR

The Detector circuitry demodulates the RF carrier to provide an audio signal that is independent of temperature and RF frequency. This assures proper operation of the RF leveling and detected audio Hi/Lo circuits. Calibration adjustment is also provided for the detected audio signal which is used for self-test.

The frequency response and detected audio level temperature dependence are handled by two independent parts of the Temperature Compensated Detector circuitry. The frequency response is leveled over the 25 MHz to 450 MHz range by capacitor C26 and resistor R14.

The temperature compensation circuitry involves CR1, CR2, Q1, and Q2 and is achieved by using the same type diode as the detector, but used in a compensation capacity. With an increase in temperature, the Voltage vs. Current curve of detector CR1 shifts. However, the bias current of CR1 is controlled by CR2, the compensating diode. When the bias point of CR1 changes due to a temperature fluctuation, the bias current provided through CR2 offsets the change. Q1 and Q2 provide the current drive for the network.

Lowpass network L4 and C27 prevent modulated RF from entering the audio circuitry but have negligible effect on the detected audio waveform. R58 and C54 form an additional lowpass filter at the input to U9B. The op amp U9B buffers the temperature compensation circuitry output and provides drive to the audio level processing circuitry.

The calibrated detected audio is provided as an output to the audio board. The calibration of this signal is accomplished using the Detected Audio High/Low circuitry on the Audio Board and is discussed above. The output level is adjusted by pot R44.

4.5.21 LPF & INTEGRATOR

To obtain a signal which is proportional to the average RF power level from the detected audio signal, it is necessary to find the average DC level. This is done for all valid audio frequencies above 10 Hz by a lowpass filter and integrator.

Resistor R57 and Capacitor C49 form the first pole of the leveling loop filter. Op Amp U9C buffers this first pole and drives the loop integrator formed by Op Amp U8, Capacitors C45, C46 and C44, and Resistors R48 and R47. The output of U8 drives the voltage control pin (U2-8) of RF amplifier U2.

4.5.22 SCALING & RF LEVEL SET

The RF level is set and controlled by adjusting the voltage at pin 3 of U8. At output frequencies greater then 25 MHz the leveling loop described above is closed. The high gain of U8 at DC maintains the DC value of the detector output at the voltage set at pin 3. Maintaining this voltage, integration amplifier U8 drives the control pin of RF amplifier U2 to adjust the RF level seen by the detector, thereby fixing the output level of the modulator.

Voltage reference (J1-16) is scaled by resistors R41, R42, R37 and pot R39 to the appropriate detectors voltage. RF level is calibrated by R39. Minor detector frequency response corrections are accomplished by software, which adjusts the voltage reference by means of the audio board.

At output frequencies below 25 MHz, the change in output level do to frequency and temperature is minimal. Therefore, the modulator can be ran open loop. Software adjusts the voltage reference to compensate minor frequency response variations, as it does at higher frequencies. To open the leveling loop, control signal DET SEL (pin 4 of J1) is taken high. This disconnects the RF output from the detector using relay K1, reduces the DC gain of U8 to one by connecting across the integrator components with analog switch U7, and selects resistor network R40 and R38 in place of R37. Potentiometer R38 allows changing the voltage reference scaling to calibrate this lower frequency band output level.

The diodes CR3 and CR4 clamp the AGC gain control voltage at a maximum of +1.4 Volts. The gain control input of the leveling VGA gives maximum gain near 1 Volt. Since the negative supply of U9 is ground, the minimum output is just above ground.

4.5.23 RF HIGH/LOW INDICATION

The RF High/Low Indication circuitry indicates only that the leveling loop is operating within established limits. It does not, however, indicate that the RF output power level is within a certain percentage of the calibrated level. The indication circuitry consists of two window comparators in U6. The leveling loop control voltage is compared to two voltages derived from the voltage reference. The comparison voltages are 80 mV for an RF High indication and 1.05 Volts for an RF Low indication.

If the leveling loop gain control voltage attempts to lower the RF output by developing a voltage of less than 80 mV, "RF level too high" is indicated. Conversely, if the leveling loop gain control voltage attempts to raise the RF output by developing a voltage greater than 1.05 V, "RF level too low" is indicated. Both error indications are +5 VDC.

4.6 PROGRAMMABLE STEP ATTENUATOR

The Programmable Step Attenuator provides control over the RF output power level. The output can be switched from +7 dBm to -120 dBm in 0.1 dB steps. It is driven by the Programmable Step Attenuator Control circuitry on the Audio Board.

4.7 SYNTHESIZER CIRCUITS

The synthesizer generates a CW frequency at a -20 dBm level in 10 Hz steps from 150 kHz to 450 MHz. To set the synthesizer frequency, the NAV 2000R CPU board first checks the new frequency flag (RAM location 5 of REF/CONTROL board within the synthesizer) to verify that the last frequency loaded has been processed. The new frequency is loaded as a BCD value (LSB=10 Hz) in RAM locations 0 through 3. The new frequency flag is then set. The synthesizer microprocessor, upon seeing the new frequency flag set, reads the new frequency value and converts it into the proper control signal required by the synthesizer circuitry.

Circuits of the synthesizer reside on the REFERENCE/CONTROL board, the RF/OUTPUT board, the MAIN VCO, and the 400 MHz VCO. The REF/CONTROL board generates the frequency standards and the control signals required for selection of NAV 2000R RF frequencies. The RF/OUTPUT board contains the phase lock loop circuitry, dividers, filters and leveling loop circuits required to produce these frequencies. The MAIN VCO covers a frequency range of 225 MHz to 456.25 MHz. The 400 MHz VCO generates a 400 MHz signal when phase locked to the reference. Each board will be covered separately in the following discussion.

4.7.1 REFERENCE/CONTROL BOARD CIRCUITS

For the following discussion, refer to the JPN drawing 02-5852-00 in Section V. Control of the synthesizer is maintained by microprocessor U1. Communication with the NAV2000R main CPU is accomplished by means of RAM U2. This memory may be read or written either by the board microprocessor U1, or by means of the NAV 2000R system buss. This access is time multiplexed. The system buss addressed this memory by placing an address of between 0800h and 1000h on its address buss and pulling the Synthesizer BUS REQUEST line low. Decoder U30 detects this combination and the lack of read or write cycles of the on board processor and outputs a low on pin 14 of U30. This connects RAM U2 address and data bus to the system bus by means of ICs U3, U4, and U29. Inverted by U12, a low on U30-14 produces a high on the J, K not, and CLR not inputs of flip flop U11. The ALE (address latch enable) clocks this flip flop synchronizing the internal bus with the system bus. Seeing BUS GRANT low, the system bus completes its transaction. Microprocessor U1 selects RAM U2 by taking P1.0 (U1-1) low. With P1.0 low, either RD not or WR not will enable the outputs of latch U10 and buffer U5. Thus, a read or write is generated to the RAM address selected.

To load a frequency, the microprocessor first outputs data serially to the MAIN PLL located on the RF/OUTPUT board. This is done using three lines, PLL CLK (P2.0), PLL DATA (P2.2), and PLL EN not (P2.2). The values loaded represents the divide ratios required by the main phase lock loop. Then the microprocessor outputs nine discrete controls. Eight are outputted via the microprocessor bus and latched by U6. One is directly controlled using P2.3 of the microprocessors I/O. The eight latched control signals select the proper filter, RF divider, and VCO(s). The last discrete control signal allows stable VCO operation whenever a change in VCO selection is required. Finally, the microprocessor loads the Direct Digital Frequency Synthesizer with values required to produce the proper MAIN PLL reference. The value loaded here is the phase increment required, to produce a 700 kHz signal plus or minus (+/-) 1.2 kHz (as required) from the 10 MHz clock.

The Direct Digital Frequency Synthesizer is composed of the DDFS integrated circuit U15, Digital to Analog Converter U16, and low pass filter C13, L1, C14 and L2. The DDFS contains a 32 bit phase accumulator and a phase to sinewave value converter. For each 10 MHz clock cycle, the DDFS IC adds the phase value loaded by the Microprocessor to the previous phase value and outputs the sine value of this new phase to the DAC. The DAC converts this sine value to a amplitude of current. Resistor R12 develops a corresponding voltage. The full scale current is set by resistor R11 and reference voltage source U17. This sampled signal, produced by the DAC, is filtered by the low pass filter to remove the sampling frequency.

The output of the DAC is applied to the gate of transistor Q2. Applied to the source of Q2 is a 10 MHz square wave. This square wave causes Q2 to switch on and off to generate a mixing function, multiplying the 10 MHz and 700kHz. The drain of Q2 is tuned to 10.7 MHz and matches this output to the crystal filter FL1. FL1 is a four pole filter compassed of two cans and coupling capacitor C18. The output of this filter is matched to the input of amplifier transistor Q2 by means of transformer T2. The output of Q2 is matched to 50 ohms by transformer T3. The 10.7 MHz produced is used as the reference frequency for the MAIN PLL on the RF/OUTPUT board.

The synthesizer frequency standard is the Temperature Compensated Voltage Controlled crystal Oscillator (TCVCXO) Y1. The output of this TCVCXO is a 5 volt 10 MHz square wave. The voltage control pin (pin 4) is biased at 2.5 Vdc internally, which corresponds to its center frequency. In operation without an external frequency standard, this input is disconnected by means of analog switch U25. But, when an external standard is connected, this input is controlled within a phase lock loop. Applying a 10 MHz standard at INPUT J6 causes comparator U20 to operate. Seeing this signal, inverter U21 charges C35 through diode CR1. When the voltage on C35 exceeds the threshold voltage of U21 pin 5, the output at U21 pin 6 goes low. The output of comparator U20 is gated to phase comparator U23 and the voltage control pin of TCVCXO Y1 is connected to the output of the loop filter present at Op Amp output U24 pin 1 through analog switch U25. The internal standard is then pulled into phase lock with the external standard, thus moving the reference frequency to that of the external standard. The output of TCVCXO Y1 is buffered by CMOS gates of U22 and U21, and used as clocks for the microprocessor and DDFS, used to drive the 10.7 mixer, and sent to the 10 MHz OUTPUT J7 through transformer T7.

4.7.2 RF/OUTPUT BOARD CIRCUITS

Refer to the JPN schematic 02-5868-00 during the following discussion. The RF/OUTPUT board consists of a MAIN PLL, RF frequency dividers, harmonic suppression filters, a 400 MHz PLL, a Mixer and filter, and output leveling.

The MAIN PLL is used to generate frequencies from 225 MHz to 456.25 MHz. Controlling the MAIN VCOs, the heart of this loop is the PLL IC U3. This PLL IC contains Reference input dividers, a dual modulus divide by 64/65 prescaler, dual modulus divide by A and N counters, and a digital phase comparator. The PLL IC is programmed by the microprocessor on the REF/CONTROL board. The reference divider is set for divide by 214, producing an internal 50 kHz reference to the phase comparator. With sequential programming of the A and N counters, this produces frequency steps of 50 kHz at the RF frequency. As noted earlier, the NAV 2000R synthesizer has step size of 10 Hz. To produce this smaller frequency step, the 10.7 MHz reference input is shifted up or down in frequency to produce the proper RF frequency. As an example, consider the 10.7 MHz frequency shift, required to shift 321 MHz plus 10 Hz. 321 MHz is 30 times 10.7 MHz. So to shift 321 MHz plus 10 Hz, 10.7 MHz must be shifted by 0.333 Hz or 10/30. The DDFS on the REF/CONTROL board can produce this shift to within less than one millihertz. Transistor amplifiers Q1 and Q2 buffer the VCO output to isolate the PLL dividers from the VCO and apply the VCO frequency to the PLL prescaler. The digital phase comparator generates five volt to ground pulses, equal in width as the time due to phase difference between the 50 kHz reference and the divided RF frequency. If the RF frequency is too low, pulses are on OV (pin 4 of U3). If the RF frequency is too high, pulses are on OR (pin 3 of U3). Low pass filter/integrator U1 and surrounding components form the loop filter.

The second output of the MAIN VCO is buffered by transistors Q3 and Q26. The level from these buffers is approximately +10 dBm. At the resistor network composed of R86, R87, R88, and R89, this signal is split, and dropped in level by approximately 4.5 dB and applied to PIN diode switch CR16 and 19 dB to mixer MX1.

PIN diode switch CR16 routes the MAIN VCO output signal to either the RF dividers (U12 and U13) or the PIN diode switch CR5. Diodes CR14 and CR15 and transistor Q27 logic selects routing to the PIN diode switch only when either path of CR5 is selected. Otherwise, the path to the dividers is selected. For output frequencies of 225 MHz to 450 MHz, the path to CR5 is selected. For frequencies of 225 MHz to 310 MHz, the path through the 375 MHz low pass filter is selected. For frequencies of 310 MHz to 450 MHz, the through path via C145 is selected.

For output frequencies between 56.25 MHz and 225 MHz, the MAIN VCO output described above is divided. Between frequencies of 112.5 and 225 MHz, only U12 is enabled. The divided by two output of U12 is routed via PIN diode switches CR1 and CR2 either through the 260 MHz LP filter for output frequencies 155 MHz to 225 MHz, or through the 180 MHz LP filter for output frequencies 112.5 MHz to 155 MHz. Between frequencies of 56.25 and 112.5 MHz both U12 and U13 are enabled. In this case, the divided by four output is routed via PIN diode switches CR2 and CR3 either through the 130 MHz LP filter for frequencies 75.5 to 112.5 MHz, or through the 90 MHz LP filter for frequencies 56.25 to 75.5 MHz.

For output frequencies of 150 kHz to 56.25 MHz, PIN diode switches CR1 - CR6 are off, isolating the MAIN VCO output. To produce this low band of frequencies the 400 MHz PLL operates. The 400 MHz VCO is enabled. The divide by 40 prescaler U11 operates. Phase comparator U10 produces a phase error signal that is filtered by loop filter U9 and its surrounding components. The loop locks, timing the 10 MHz reference at pin 3 of U10 to the divided RF signal at pin 14. Therefore, a 10 MHz times 40 or 400 MHz is generated by the 400 MHz VCO. Buffer transistor Q4 isolates the phase detector from the VCO. Likewise buffer transistor Q5 isolates the Mixer (MX1) from the VCO and the phase detector. This 400 MHz input to the Mixer is at a level of approximately 7 dBm. The MAIN VCO output, reduced to a level of approximately -9 dBm, is applied to the RF input of the mixer. To produce the low band outputs, the MAIN PLL is tuned to 400 MHz plus the output frequency. Therefore, the MAIN PLL outputs frequencies from 400.15 MHz to 456.25 MHz. The output of the mixer is filtered to remove the 400+ MHz signals. Amplified by U14, it then passes through PIN diodes CR12, CR13, and CR7.

The resistor network composed of R104, R105, R106, R107, R108, and R91 combine the selected RF path with other RF paths. It is important to note that only one RF path is selected during any one time. The RF of interest, at a level of approximately 0 dBm, is passed through a 500 MHz LPF to the leveling circuit.

The leveling loop is composed of voltage controlled attenuator AT1, amplifier U20, detector circuits and an error amplifier. Resistor R115, which is tapped off the output of amplifier U20, feeds the detector circuit. Transistors Q22 and Q23 form a fixed current source which biases the hot carrier diode CR11. CR10, the same type diode as CR11, has equal current flowing through it. In this configuration, the voltage variations due to temperature are cancelled by the matching diodes with equal currents. The output of this detector circuit, found at the collector of Q22, is buffered by Op Amp U18B and applied to error amp U18A. U18A is configured as an integrating amp. The output of the error amp is feedback to the attenuator, closing the loop. Pot R137 adjusts the output level and is set for an output level of -20 dBm. Comparators in U17 monitor the control voltage. U17 pin 7 goes low if the control voltage goes below its lower limit. U17 pin 1 goes low if the control voltage exceeds its higher limit.

4.7.3 MAIN VCO

The MAIN VCO board covers a frequency range of 225 to 456.25 MHz. The MAIN VCO consists of four separate selectable VCOs and a common output buffer amplifier. Each VCO covers a portion of this tuning range. The tuning range of each VCO is as follows; VCO1 - 380 to 456.25 MHz, VCO2 - 320 to 380 MHz, VCO3 - 275 to 320 MHz, VCO4 - 225 to 275 MHz. Each VCO is of similar design. The active element is a RF JFET transistor. This transistor is configured as a grounded gate amplifier with a resonant structure on its drain and the output signal coupled from its source. The resonant structure is a microline inductor paralleled with a capacitor and varactor diode. A capacitor produces feedback from the source to the drain. The power supply is isolated by an appropriate inductor and applied to the drain. The tuning line is isolated by a appropriate inductor and common to all four VCOs. The tuning voltage ranges from 4 and 20 VDC with the highest voltage producing the highest frequency. Each VCO has a bipolar switch to apply or remove bias from the JFET transistor's source. The capacitor tapped output is combined by means of 39 ohm resistors to the input of the buffer amplifier. The buffer amplifier is a class A transistor amplifier with the collector biased by a wide band transformer and base biased by two resistors. The output is taken from a center tap of this transformer. The output is split by a resistor network, which pads the output to the divider buffers from the main output.

4.7.4 400 MHz VCO

The 400 MHz VCO board as a single VCO similar in design to the VCOs of the MAIN VCO board. The output as likewise buffered by a transistor amplifier of similar design. As was explained previously, this VCO runs only during low band operation (150 kHz - 56.25 MHz). It is always operated at 400 MHz. Its tuning voltage should be approximately 5 VDC.

4.8 REVERSE POWER PROTECTION

For the following discussion refer to TSD schematic drawing 02-6157-00. With the POWER switch in the OFF position, relay K101 is in its normally open state. This prevents any damage to the instrument while it is not in use. On power-up, a reset command is issued by the NAV 2000R CPU board, to flip-flop U2. U2's output turns on Q1 and Q2 providing drive to relay K101's control pin thereby closing the path between the NAV 2000R output stage and the unit under test.

U1 compares the voltage from the detector circuit composed of CR102, CR103, R101 and C101 to a 2V reference. Should the detected signal exceed the 2V threshold (approx. +20 dBm of RF input), U1's output will change state clearing U2 and opening relay K101. In addition, the CPU board is notified of the tripped condition via the RPPINT discrete output. Maximum trip time is 4 msec. Pin diodes CR103 through CR106 provide high speed protection of the NAV 2000R output by clamping the RF signal to ground until K101 has opened the RF path. K101 will remain open until the RPPRST line is asserted by the CPU board.

SECTION V
MAINTENANCE

5.1 BILLS OF MATERIAL, ASSEMBLY DRAWINGS, SCHEMATICS AND TEST PROCEDURE

To assist in the maintenance of the JcAIR Test Systems, Goodrich Corporation, Model NAV 2000R SIGNAL GENERATOR, Bills of Material, Assembly Drawings, Schematics and Test Procedures are included in this Section of the Maintenance Manual.

JcAIR INC.

NAME: NAV 2000R GENERATOR (HIGH POWER) ASSY NO: 01-0520-80

REVISION: 05 DATE: 07/20/2001

ITEM/ SYMBOL	JcAIR PART NO.	DESCRIPTION	U/M	QTY	MANUFACTURER	MANF'S P/N
1	57-0520-80	SERIAL TAG NAV 2000R	EA	1.00	JCAIR	57-0520-80
2	57-0520-51	LABEL CARD NAV2000R	EA	1.00	JCAIR	57-0520-51
3	47-1852-20	PLATE MOUNTING BLANK NAV 2000	EA	1.00	JCAIR	47-1852-20
7	47-2081-59	TOP COVER NAV2000R	EA	1.00	JCAIR	47-2081-59
8	47-2081-53	BOTTOM COVER NAV 2000R	EA	1.00	JCAIR	47-2081-53
9	89-3104-10	SCREW FHP #4-40 X .625 SS 100 DEG	EA	12.00	MIL SPEC	MS24693C-7
10	15-5149-03	TILT-STAND RETRACTABLE 12.0 WIDE	EA	1.00	BUCKEYE	MP-40008-4
11	89-2106-06	SCREW PHP #6-32 X .375	EA	6.00	MIL SPEC	MS51957-28
12	89-0106-00	WASHER FLAT #6 SM PAT	EA	6.00	NATIONAL AERO	NAS620C6L
13	89-0906-00	WASHER LOCK #6	EA	6.00	MIL SPEC	MS35338-136
					MIL SPEC	MS35338-79
14	03-0003-01	ARTWK JCAIR MOD STATUS 1-50	EA	1.00	JCAIR	02-0003-01
15	57-9520-00	LABEL NAV2000R POWER INPUT	EA	1.00	JCAIR	57-9520-00
16	57-9060-10	LABEL CAUTION EN61010-1 SYMBOL 14 YL/BLK	EA	1.00	VERIAD	202
17	57-9060-00	LABEL CE MARK BLK/SILVER (1000 P/ROLL)	EA	1.00	UAL	CE100WB
					UNITED AD LABEL	CE100WB
A1	20-9520-80	NAV 2000R -80 CHASSIS ASSY	EA	1.00	JCAIR	20-9520-80
A2	20-5742-03	CPU BD W/+7DBM & RPP NAV2000R	EA	1.00	JCAIR	20-5742-03
A3	20-5743-10	DSP BOARD NAV 2000	EA	1.00	JCAIR	20-5743-10
A4	20-9520-57	AM MODULATOR ASSY NAV 2000R -80	EA	1.00	JCAIR	20-9520-57
A5	20-9520-52	SYNTHESIZER ASSY NAV 2000R	EA	1.00	JCAIR	20-9520-52
ACC1	06-0520-80	MANUAL NAV2000R HIGH POWER	EA	1.00	JCAIR	06-0520-80
REF1	25-0520-80	ASSY DWG NAV 2000R GENERATOR HIGH OUTPUT	EA	-		
REF2	04-0520-80	TEST PROCEDURE NAV2000R -80	EA	-		
REF3	00-0520-80	PRODUCT STRUCTURE NAV2000R-80	EA	-		
REF4	04-0520-81	TEST PROCEDURE PRODUCTION NAV2000R-80	EA	-		

REVISIONS			
REV.	DESCRIPTION	DATE	APPROVED
1	CHNG VOR TO VOR MKR: CHNG MKR COM TO COM	7/96	RRN
2	UPDATED ARTWORK P/MTKG REQUEST	11/96	TM
3	UPDATED DWG FOR CE MARKING	01/16/01	L JOY
4	ADD ITEM 17 CE MARKING	07/19/01	L JOY
5	CORRECTED KEY LABELING	10/31/01	L YOUNG

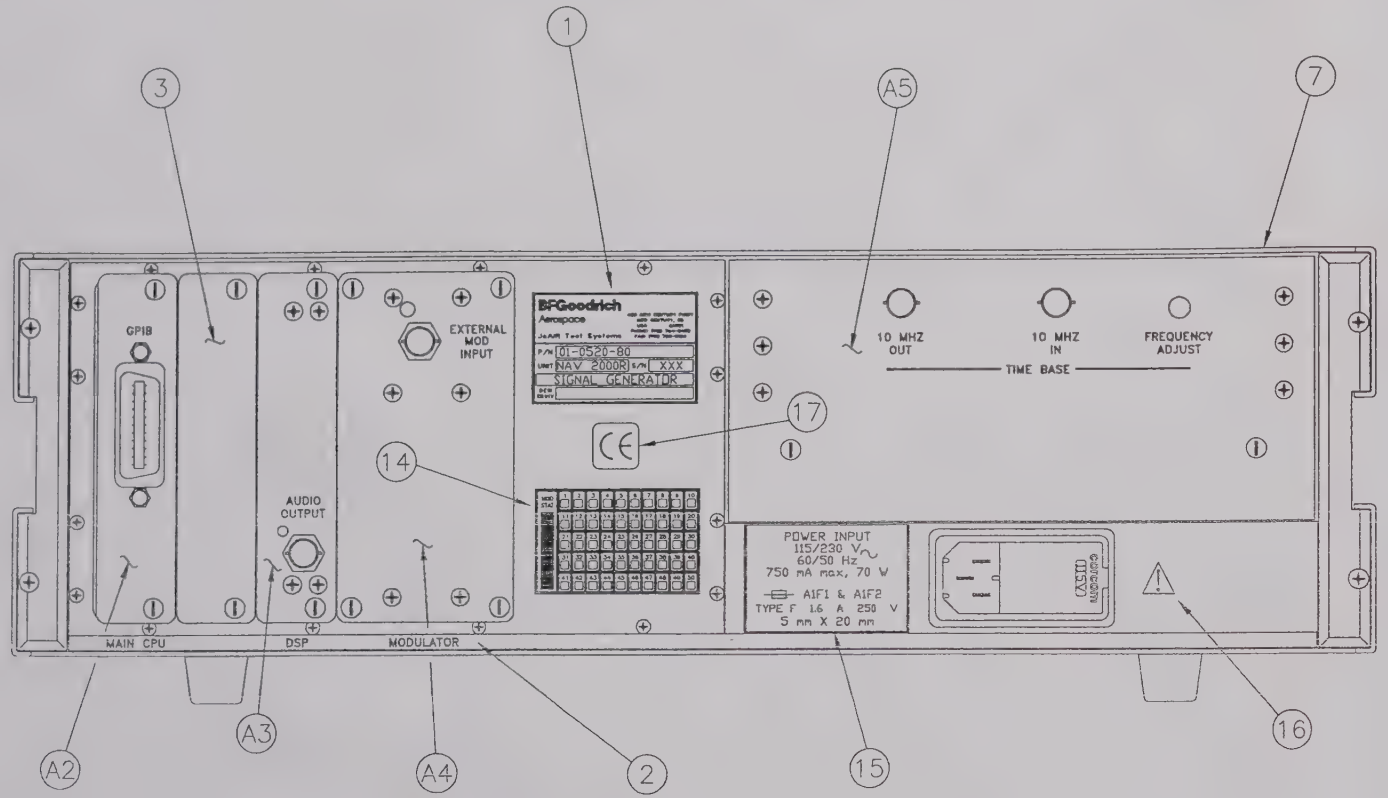

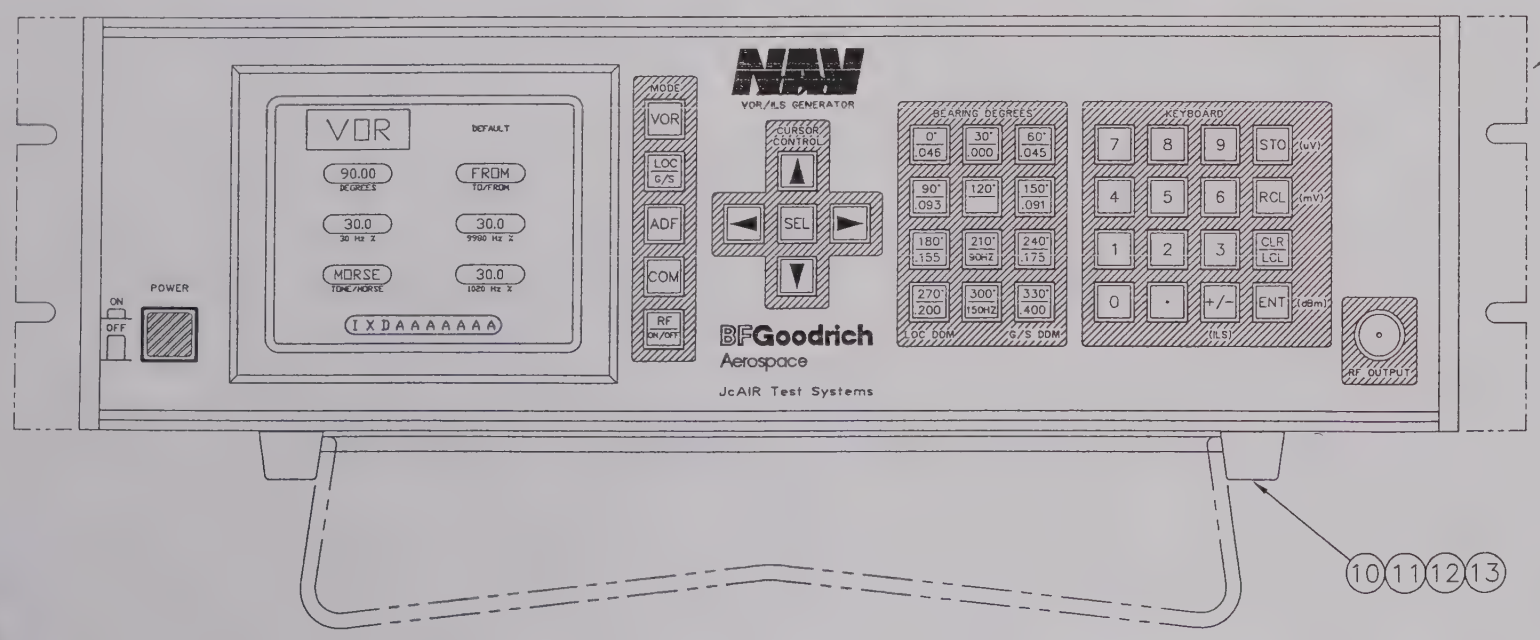

OPTIONAL RACK MOUNT EARS

10 11 12 13

01-0520-80	01-0520-80
NEXT ASS'Y	TOP BILL
UNIT	NAV 2000R

DIMENSIONS ARE IN INCHES
TOLERANCES ARE:
DECIMALS: FRACTIONS: ANGLES:
.XX ±01 ± 1/64 ± 1/2°
.XXX ±005

MATERIAL: –
–

FINISH: –
–

GOODRICH CORPORATION PROPRIETARY INFORMATION

APPROVALS	DATE
DRAWN RRN	10/94
ENG. RRN	10/94
ISSUED KSM	02/08/01
FILE NAME 25052080.DWG	

GOODRICH
JcAIR TEST SYSTEMS
GOODRICH CORPORATION
400 NEW CENTURY PKWY
NEW CENTURY, KS 66031-0009 USA
PHONE: (913) 764-2452
FAX: (913) 782-5104

ASSEMBLY DRAWING
NAV 2000R

SIZE	CAGE NO.	DWG. NO.	REV.
B	41364	25-0520-80	05
			SHEET 1 of 3

05-0019-02

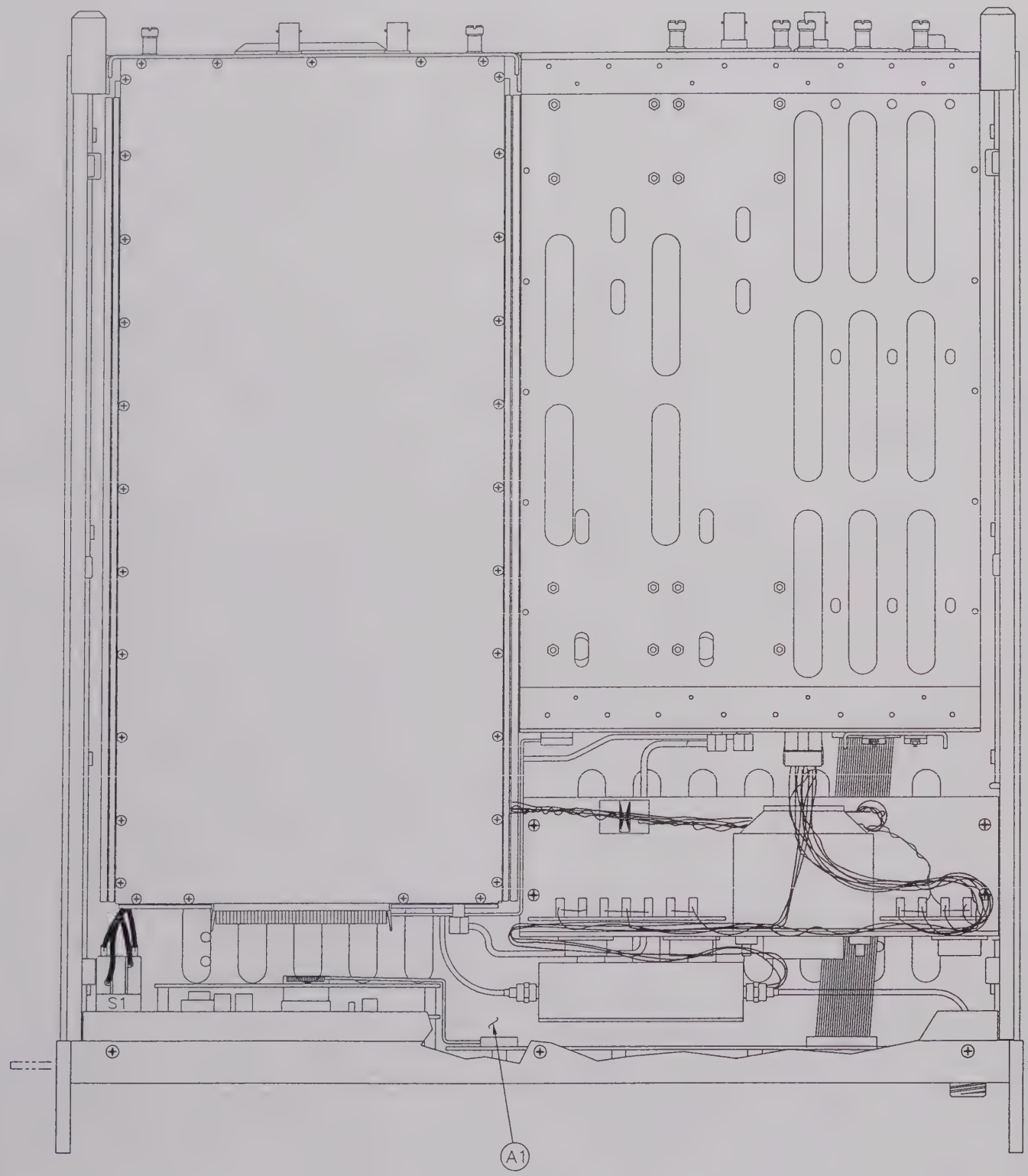

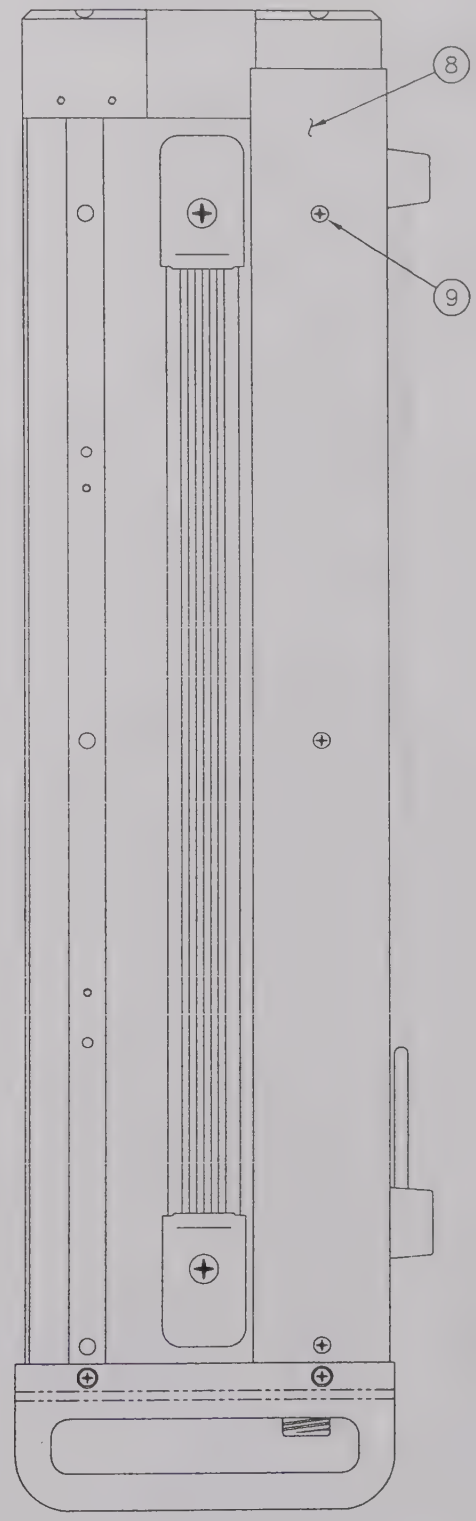

THE "TOP COVER" ITEM #7 IS NOT SHOWN IN THE VIEWS ON THIS PAGE.

SIZE	CAGE NO.	DWG. NO.	REV.
B	41364	25-0520-80	05
			SHEET 2 of 3

SIZE	CAGE NO.	DWG. NO.	REV.
B	41364	25-0520-80	05

SHEET 3 of 3

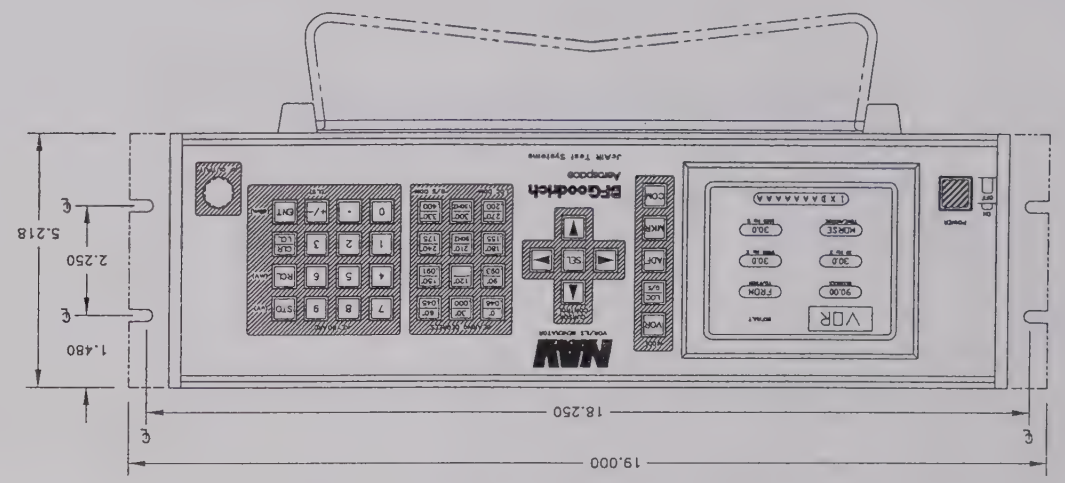

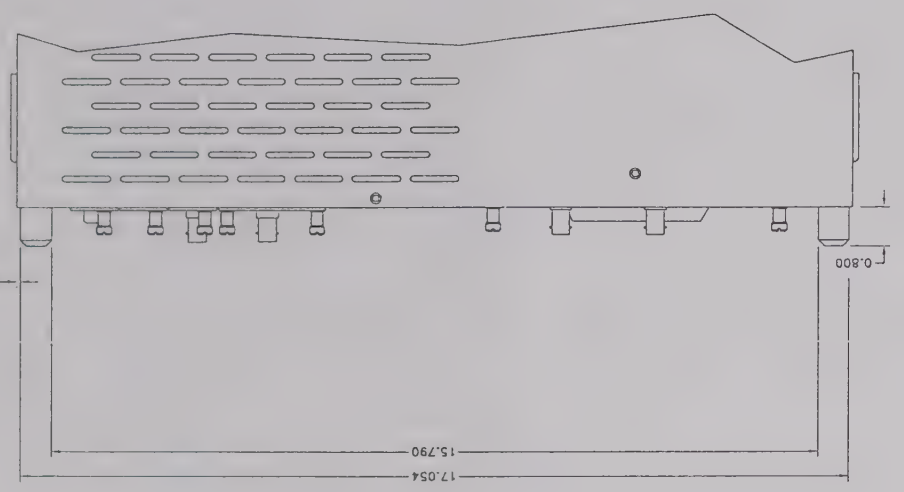

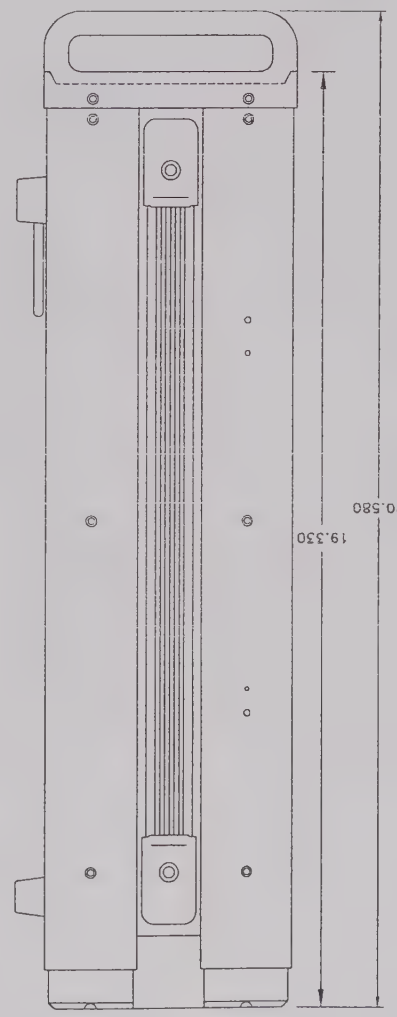

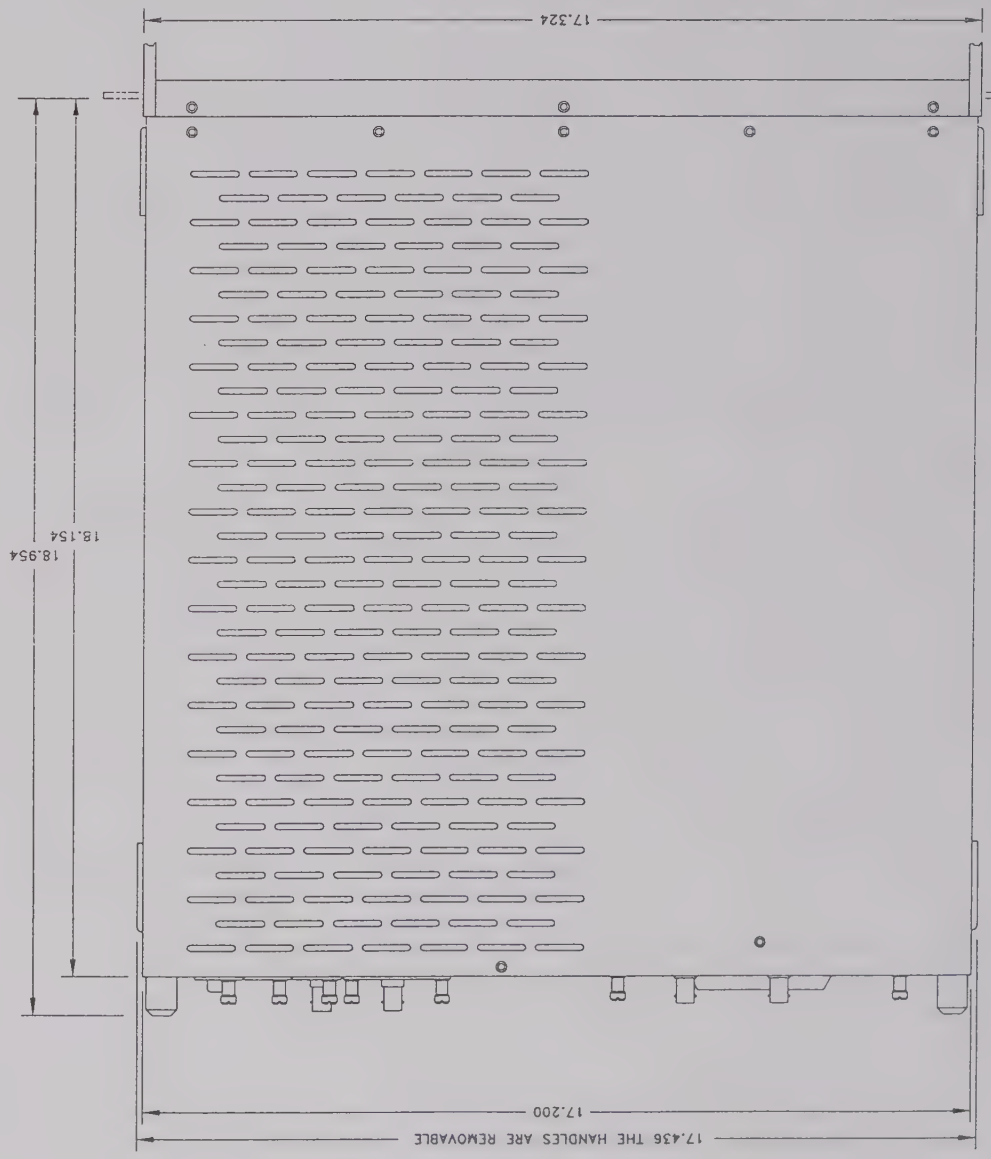

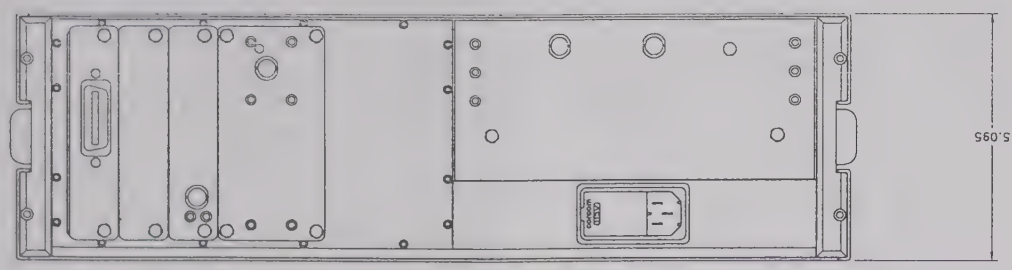

REVISIONS			
REV.	DESCRIPTION	DATE	APPROVED
1	CHG SYNTH & VCO DASH NO'S; NEW BFG TITLE BLOCK	01/10/00	D TRAUL
2	CHGD SYN P/N FROM 20-9520-58 TO 20-9520-52	05/18/00	

- **DOCUMENTATION**
  06-0520-80
  04-0520-80
- **NAV 2000R**
  01-0520-80
  25-0520-80
  04-0520-81(FACTORY TST)
  - (OPTIONAL) **EXTENDER BOARD**
    02-5760-00
    20-5760-00
    25-5760-00
  - **CHASSIS ASSY**
    02-9520-80
    04-9520-50
    20-9520-80
    25-9520-80
    A1
    - **PWR JACK/SW ASSY**
      20-9520-55
      25-9520-55
      A1A1
      - **DISPLAY**
        15-0094-00
        A1A5
      - **COAX, MOTHER BD TO RF OUT, FRONT**
        55-0520-52
        A1 W2
      - **COAX, SYNTH TO MOTHER BOARD**
        55-0520-53
        A1 W1
    - **PWR SUPPLY**
      02-9520-53
      20-9520-53
      25-9520-53
      A1A2
    - **CARD CAGE**
      20-9520-54
      25-9520-54
      A1A3
      - **MOTHER BOARD**
        02-5900-00
        20-5900-00
        25-5900-00
        A1A3A1
        - **RIBBON CABLE 24 PIN**
          55-0520-00
        - **RIBBON CABLE 50 PIN**
          55-0520-03
    - **KEYBOARD**
      02-5745-20
      20-5745-20
      25-5745-20
      A1A4
      - **RIBBON CABLE 16 PIN**
        55-0520-51
    - **RPP MODULE**
      04-9520-62
      20-9520-62
      25-9520-62
      A1A6
      - **CONTROL BD**
        02-6157-00
        20-6157-00
        25-6157-00
        A1A6A2
      - **RF BD**
        02-6156-00
        20-6156-00
        25-6156-00
        A1A6A1
  - **CPU BOARD**
    02-5742-00
    04-5742-00
    20-5742-03
    25-5742-01
    A2
  - **DSP BOARD**
    02-5743-10
    04-5743-10
    20-5743-10
    25-5743-10
    A3
  - **AM MODULATOR**
    02-9520-57
    04-9520-51
    20-9520-57
    25-9520-57
    A4
    - **AUDIO BOARD**
      02-5761-30
      20-5761-30
      25-5761-30
      A4A1
    - **RF/MODULATOR**
      02-5951-00
      20-5951-00
      25-5951-00
      A4A2
      - **STEP ATTENUATOR**
        18-0055-00
        A4A3
      - **COAX, ATTEN TO OUTPUT**
        55-0520-54
        A4W1
      - **COAX, ATTEN INPUT**
        55-0520-55
        A4W2
  - **SYNTHESIZER**
    02-9520-52
    04-9520-52
    20-9520-52
    25-9520-52
    A5
    - **CONTROL/REFERENCE**
      02-5852-10
      20-5852-10
      25-5852-10
      A5A1
    - **RF OUTPUT**
      02-5868-00
      20-5868-00
      25-5868-00
      A5A2
    - **MAIN VCO**
      02-5867-00
      20-5867-00
      25-5867-00
      A5A3
    - **400 MHZ VCO**
      02-5866-10
      20-5866-10
      25-5866-10
      A5A4

01 - TOP LEVEL BILL OF MATERIAL
02 - SCHEMATIC
04 - TEST PROCEDURE
06 - MANUAL
20 - BILL OF MATERIAL
25 - ASSEMBLY DRAWING
55 - CABLE ASSEMBLY

NAV 2000R -50 RF CONNECTOR IS MOUNTED ON FRONT
NAV 2000R -60 RF CONNECTOR IS MOUNTED ON REAR
NAV 2000R -70 UNIT W/479S-6A IEEE-488 COMMAND SET & REMOTE INTERFACE CARD, RF CONNECTOR ON FRONT
NAV 2000R -TA TYPE CERTIFIED UNIT, RF CONNECTOR ON FRONT
NAV 2000 -80 RF CONNECTOR ON FRONT, +7dBm OUTPUT

01-0520-80	01-0520-80
NEXT ASS'Y	TOP BILL

UNIT: NAV 2000R

DIMENSIONS ARE IN INCHES
TOLERANCES ARE:
DECIMALS: .XX ±.01 .XXX ±.005
FRACTIONS: ± 1/64
ANGLES: ± 1/2°

MATERIAL: –

FINISH: –

BFGOODRICH AEROSPACE PROPRIETARY INFORMATION

APPROVALS	DATE
DRAWN RRN	07/23/96
ENG. BP	08/05/96
ISSUED	5/23/00

FILE NAME: 00052080.DWG

BFGoodrich Aerospace
JcAIR Test Systems
400 NEW CENTURY PARKWAY
NEW CENTURY, KS 66031-0009 USA
PHONE (913) 764-2452
FAX (913) 782-5104

PRODUCT STURCTURE

SIZE	CAGE NO.	DWG. NO.	REV.
B	41364	00-0520-80	02

SHEET 1 of 1

05-0019-02

JcAIR INC.

NAME: CPU BD W/+7DBM & RPP NAV2000R ASSY NO: 20-5742-03

REVISION: 01 DATE: 10/16/1998

ITEM/ SYMBOL	JcAIR PART NO.	DESCRIPTION	U/M	QTY	MANUFACTURER	MANF'S P/N
1	09-5742-00	PCB CPU NAV2000	EA	1.00	QMC	09-5742-00
2	47-2089-16	PLATE MOUNTING CPU NAV2000	EA	1.00	JCAIR	47-2089-16
4	30-9122-00	SCREW LOCK METRIC HARDWARE KIT	EA	1.00	AMP	554808-1
5	89-2102-07	SCREW PHP #2-56 X .438	EA	2.00	MIL SPEC	MS51957-6
6	89-0102-00	WASHER FLAT #2 .150 OD (SML PAT)	EA	2.00	NATIONAL AERO	NAS620C2
7	89-0902-00	WASHER LOCK #2	EA	2.00	MIL SPEC	MS35338-134
8	89-1102-00	NUT HEX #2 SM PAT SS	EA	2.00	NATIONAL AERO	NAS671C2
9	89-2104-06	SCREW PHP #4-40 X .375	EA	2.00	MIL SPEC	MS51957-15
10	89-0904-00	WASHER LOCK #4	EA	2.00	MIL SPEC	MS35338-135
					MIL SPEC	MS35338-78
C1	CC-2300-42	CAP MI 30PF 500V 5%	EA	1.00	KAHGAN	SD10300J501
C2	CC-2200-42	CAP MI 20PF 500V 5%	EA	1.00	CDE	CD10-ED200J03
					KAHGAN	SD10200J501
					MIL SPEC	CM04-ED200J03
C3	CB-0106-35	CAP TN 10UF 35V 10%	EA	1.00	KEMET	T354G106K035AS
C4	CE-0104-26	CAP DP .1UF 50V 20% Z5U	EA	35.00	SPRAGUE	923CZ5U104M050B
C5	CE-0104-26	CAP DP .1UF 50V 20% Z5U	EA	-		
C6	CB-1105-05	CAP TN 1UF 35V 10%	EA	1.00	KEMET	T110A105K035AS
					SPRAGUE	150D105X9035A2
C7	CE-0103-16	CAP DP .01UF 50V 10% Z5U	EA	1.00	SPRAGUE	923CZ5U103K050B
C8	CE-0681-14	CAP DP 680PF 100V 10% X7R	EA	1.00	SPRAGUE	923CX7R681K050B
C13	CB-1475-01	CAP TN 4.7UF 10V 10%	EA	4.00	KEMET	T110A475K010AS
					MALLORY	TAC475K010P02
					MIL SPEC	M39003/01-2254
					SPRAGUE	150D475X9010A2
C14	CB-1475-01	CAP TN 4.7UF 10V 10%	EA	-		
C15	CB-1475-01	CAP TN 4.7UF 10V 10%	EA	-		
C16	CB-1475-01	CAP TN 4.7UF 10V 10%	EA	-		
C17	CE-0104-26	CAP DP .1UF 50V 20% Z5U	EA	-		
C18	CE-0104-26	CAP DP .1UF 50V 20% Z5U	EA	-		
C19	CE-0104-26	CAP DP .1UF 50V 20% Z5U	EA	-		
C20	CE-0104-26	CAP DP .1UF 50V 20% Z5U	EA	-		
C21	CE-0104-26	CAP DP .1UF 50V 20% Z5U	EA	-		
C22	CE-0104-26	CAP DP .1UF 50V 20% Z5U	EA	-		
C23	CE-0104-26	CAP DP .1UF 50V 20% Z5U	EA	-		
C24	CE-0104-26	CAP DP .1UF 50V 20% Z5U	EA	-		
C25	CE-0104-26	CAP DP .1UF 50V 20% Z5U	EA	-		
C26	CE-0104-26	CAP DP .1UF 50V 20% Z5U	EA	-		
C27	CE-0104-26	CAP DP .1UF 50V 20% Z5U	EA	-		
C28	CE-0104-26	CAP DP .1UF 50V 20% Z5U	EA	-		
C29	CE-0104-26	CAP DP .1UF 50V 20% Z5U	EA	-		
C30	CE-0104-26	CAP DP .1UF 50V 20% Z5U	EA	-		
C31	CE-0104-26	CAP DP .1UF 50V 20% Z5U	EA	-		
C32	CE-0104-26	CAP DP .1UF 50V 20% Z5U	EA	-		
C33	CE-0104-26	CAP DP .1UF 50V 20% Z5U	EA	-		
C34	CE-0104-26	CAP DP .1UF 50V 20% Z5U	EA	-		
C35	CE-0104-26	CAP DP .1UF 50V 20% Z5U	EA	-		

JcAIR INC.

NAME: CPU BD W/+7DBM & RPP NAV2000R ASSY NO: 20-5742-03

REVISION: 01 DATE: 10/16/1998

ITEM/ SYMBOL	JcAIR PART NO.	DESCRIPTION	U/M	QTY	MANUFACTURER	MANF'S P/N
C36	CE-0104-26	CAP DP .1UF 50V 20% Z5U	EA	-		
C37	CE-0104-26	CAP DP .1UF 50V 20% Z5U	EA	-		
C38	CE-0104-26	CAP DP .1UF 50V 20% Z5U	EA	-		
C39	CE-0104-26	CAP DP .1UF 50V 20% Z5U	EA	-		
C40	CE-0104-26	CAP DP .1UF 50V 20% Z5U	EA	-		
C41	CE-0104-26	CAP DP .1UF 50V 20% Z5U	EA	-		
C42	CE-0104-26	CAP DP .1UF 50V 20% Z5U	EA	-		
C43	CE-0104-26	CAP DP .1UF 50V 20% Z5U	EA	-		
C44	CE-0104-26	CAP DP .1UF 50V 20% Z5U	EA	-		
C46	CE-0104-26	CAP DP .1UF 50V 20% Z5U	EA	-		
C47	CE-0104-26	CAP DP .1UF 50V 20% Z5U	EA	-		
C48	CE-0104-26	CAP DP .1UF 50V 20% Z5U	EA	-		
C49	CE-0104-26	CAP DP .1UF 50V 20% Z5U	EA	-		
C50	CE-0104-26	CAP DP .1UF 50V 20% Z5U	EA	-		
CR1	07-6016-00	DIODE SIL 1N4148 PKG=DO35	EA	1.00	MOTOROLA	1N4148
CR2	07-7012-00	LED RED RT ANGLE PC MOUNT	EA	1.00	DIALIGHT	550-0406
CR3	07-7012-02	LED YELLOW RT ANGLE PC MOUNT	EA	1.00	DIALIGHT	550-0306
CR4	07-7012-01	LED GREEN RT ANGLE PC MOUNT	EA	1.00	DIALIGHT	550-0206
J1	30-5245-48	CONN CARD EDGE TRPL PLUG RT ANG 48 POS	EA	1.00	TRW	009-00010-4
					TRW	43-1482
J2	30-5085-00	CONN SHLD RT ANG PC MNT 24 POS IEEE488	EA	1.00	AMP	553811-1
L1	19-2153-03	INDUCTOR MOLDED 10UH .44A .605 OHM 10%	EA	1.00	DALE	IM-6 10UH 10%
					MIL SPEC	MS75101-7
Q1	07-0132-00	XSTR NPN 2N2222A PKG=TO18	EA	1.00	MOTOROLA	2N2222A
R1	RB-0103-23	RES CF 10K QW 5%				

JcAIR INC.

NAME: CPU BD W/+7DBM & RPP NAV2000R ASSY NO: 20-5742-03

REVISION: 01 DATE: 10/16/1998

ITEM/ SYMBOL	JcAIR PART NO.	DESCRIPTION	U/M	QTY	MANUFACTURER	MANF'S P/N
1	09-5742-00	PCB CPU NAV2000	EA	1.00	QMC	09-5742-00
2	47-2089-16	PLATE MOUNTING CPU NAV2000	EA	1.00	JCAIR	47-2089-16
4	30-9122-00	SCREW LOCK METRIC HARDWARE KIT	EA	1.00	AMP	554808-1
5	89-2102-07	SCREW PHP #2-56 X .438	EA	2.00	MIL SPEC	MS51957-6
6	89-0102-00	WASHER FLAT #2 .150 OD (SML PAT)	EA	2.00	NATIONAL AERO	NAS620C2
7	89-0902-00	WASHER LOCK #2	EA	2.00	MIL SPEC	MS35338-134
8	89-1102-00	NUT HEX #2 SM PAT SS	EA	2.00	NATIONAL AERO	NAS671C2
9	89-2104-06	SCREW PHP #4-40 X .375	EA	2.00	MIL SPEC	MS51957-15
10	89-0904-00	WASHER LOCK #4	EA	2.00	MIL SPEC	MS35338-135
					MIL SPEC	MS35338-78
C1	CC-2300-42	CAP MI 30PF 500V 5%	EA	1.00	KAHGAN	SD10300J501
C2	CC-2200-42	CAP MI 20PF 500V 5%	EA	1.00	CDE	CD10-ED200J03
					KAHGAN	SD10200J501
					MIL SPEC	CM04-ED200J03
C3	CB-0106-35	CAP TN 10UF 35V 10%	EA	1.00	KEMET	T354G106K035AS
C4	CE-0104-26	CAP DP .1UF 50V 20% Z5U	EA	35.00	SPRAGUE	923CZ5U104M050B
C5	CE-0104-26	CAP DP .1UF 50V 20% Z5U	EA	-		
C6	CB-1105-05	CAP TN 1UF 35V 10%	EA	1.00	KEMET	T110A105K035AS
					SPRAGUE	150D105X9035A2
C7	CE-0103-16	CAP DP .01UF 50V 10% Z5U	EA	1.00	SPRAGUE	923CZ5U103K050B
C8	CE-0681-14	CAP DP 680PF 100V 10% X7R	EA	1.00	SPRAGUE	923CX7R681K050B
C13	CB-1475-01	CAP TN 4.7UF 10V 10%	EA	4.00	KEMET	T110A475K010AS
					MALLORY	TAC475K010P02
					MIL SPEC	M39003/01-2254
					SPRAGUE	150D475X9010A2
C14	CB-1475-01	CAP TN 4.7UF 10V 10%	EA	-		
C15	CB-1475-01	CAP TN 4.7UF 10V 10%	EA	-		
C16	CB-1475-01	CAP TN 4.7UF 10V 10%	EA	-		
C17	CE-0104-26	CAP DP .1UF 50V 20% Z5U	EA	-		
C18	CE-0104-26	CAP DP .1UF 50V 20% Z5U	EA	-		
C19	CE-0104-26	CAP DP .1UF 50V 20% Z5U	EA	-		
C20	CE-0104-26	CAP DP .1UF 50V 20% Z5U	EA	-		
C21	CE-0104-26	CAP DP .1UF 50V 20% Z5U	EA	-		
C22	CE-0104-26	CAP DP .1UF 50V 20% Z5U	EA	-		
C23	CE-0104-26	CAP DP .1UF 50V 20% Z5U	EA	-		
C24	CE-0104-26	CAP DP .1UF 50V 20% Z5U	EA	-		
C25	CE-0104-26	CAP DP .1UF 50V 20% Z5U	EA	-		
C26	CE-0104-26	CAP DP .1UF 50V 20% Z5U	EA	-		
C27	CE-0104-26	CAP DP .1UF 50V 20% Z5U	EA	-		
C28	CE-0104-26	CAP DP .1UF 50V 20% Z5U	EA	-		
C29	CE-0104-26	CAP DP .1UF 50V 20% Z5U	EA	-		
C30	CE-0104-26	CAP DP .1UF 50V 20% Z5U	EA	-		
C31	CE-0104-26	CAP DP .1UF 50V 20% Z5U	EA	-		
C32	CE-0104-26	CAP DP .1UF 50V 20% Z5U	EA	-		
C33	CE-0104-26	CAP DP .1UF 50V 20% Z5U	EA	-		
C34	CE-0104-26	CAP DP .1UF 50V 20% Z5U	EA	-		
C35	CE-0104-26	CAP DP .1UF 50V 20% Z5U	EA	-		

NAME: CPU BD W/+7DBM & RPP NAV2000R ASSY NO: 20-5742-03

REVISION: 01 DATE: 10/16/1998

ITEM/ SYMBOL	JcAIR PART NO.	DESCRIPTION	U/M	QTY	MANUFACTURER	MANF'S P/N
C36	CE-0104-26	CAP DP .1UF 50V 20% Z5U	EA	-		
C37	CE-0104-26	CAP DP .1UF 50V 20% Z5U	EA	-		
C38	CE-0104-26	CAP DP .1UF 50V 20% Z5U	EA	-		
C39	CE-0104-26	CAP DP .1UF 50V 20% Z5U	EA	-		
C40	CE-0104-26	CAP DP .1UF 50V 20% Z5U	EA	-		
C41	CE-0104-26	CAP DP .1UF 50V 20% Z5U	EA	-		
C42	CE-0104-26	CAP DP .1UF 50V 20% Z5U	EA	-		
C43	CE-0104-26	CAP DP .1UF 50V 20% Z5U	EA	-		
C44	CE-0104-26	CAP DP .1UF 50V 20% Z5U	EA	-		
C46	CE-0104-26	CAP DP .1UF 50V 20% Z5U	EA	-		
C47	CE-0104-26	CAP DP .1UF 50V 20% Z5U	EA	-		
C48	CE-0104-26	CAP DP .1UF 50V 20% Z5U	EA	-		
C49	CE-0104-26	CAP DP .1UF 50V 20% Z5U	EA	-		
C50	CE-0104-26	CAP DP .1UF 50V 20% Z5U	EA	-		
CR1	07-6016-00	DIODE SIL 1N4148 PKG=DO35	EA	1.00	MOTOROLA	1N4148
CR2	07-7012-00	LED RED RT ANGLE PC MOUNT	EA	1.00	DIALIGHT	550-0406
CR3	07-7012-02	LED YELLOW RT ANGLE PC MOUNT	EA	1.00	DIALIGHT	550-0306
CR4	07-7012-01	LED GREEN RT ANGLE PC MOUNT	EA	1.00	DIALIGHT	550-0206
J1	30-5245-48	CONN CARD EDGE TRPL PLUG RT ANG 48 POS	EA	1.00	TRW	009-00010-4
					TRW	43-1482
J2	30-5085-00	CONN SHLD RT ANG PC MNT 24 POS IEEE488	EA	1.00	AMP	553811-1
L1	19-2153-03	INDUCTOR MOLDED 10UH .44A .605 OHM 10%	EA	1.00	DALE	IM-6 10UH 10%
					MIL SPEC	MS75101-7
Q1	07-0132-00	XSTR NPN 2N2222A PKG=TO18	EA	1.00	MOTOROLA	2N2222A
R1	RB-0103-23	RES CF 10K QW 5%	EA	8.00	NIC	NCF25-10K-B
R2	RB-0103-23	RES CF 10K QW 5%	EA	-		
R3	RC-2740-12	RES MF 274 EW 1%	EA	2.00	DALE	CMF-55 2740FT-1
					MIL SPEC	RN-55D 2740F
R4	RC-1181-12	RES MF 1.18K EW 1%	EA	1.00	DALE	CMF-55 1181FT-1
					MIL SPEC	RN-55D 1181F
R5	RC-2431-12	RES MF 2.43K EW 1%	EA	1.00	DALE	CMF-55 2431FT-1
					MIL SPEC	RN-55D 2431F
R6	RC-2740-12	RES MF 274 EW 1%	EA	-		
R7	RB-0103-23	RES CF 10K QW 5%	EA	-		
R8	RC-1002-12	RES MF 10K EW 1%	EA	1.00	DALE	CMF-55 1002FT-1
					MIL SPEC	RN-55D 1002F
R9	RB-0102-23	RES CF 1K QW 5%	EA	1.00	NIC	NCF25-1K-B
R10	RB-0104-23	RES CF 100K QW 5%	EA	2.00	NIC	NCF25-100K-B
R11	RB-0104-23	RES CF 100K QW 5%	EA	-		
R12	RB-0471-23	RES CF 470 QW 5%	EA	3.00	NIC	NCF25-470-B
R13	RB-0471-23	RES CF 470 QW 5%	EA	-		
R14	RB-0471-23	RES CF 470 QW 5%	EA	-		
R15	RB-0103-23	RES CF 10K QW 5%	EA	-		
R16	RB-0103-23	RES CF 10K QW 5%	EA	-		
R17	RB-0103-23	RES CF 10K QW 5%	EA	-		
R18	RB-0103-23	RES CF 10K QW 5%	EA	-		
R19	RB-0103-23	RES CF 10K QW 5%	EA	-		

NAME: CPU BD W/+7DBM & RPP NAV2000R ASSY NO: 20-5742-03

REVISION: 01 DATE: 10/16/1998

ITEM/ SYMBOL	JcAIR PART NO.	DESCRIPTION	U/M	QTY	MANUFACTURER	MANF'S P/N
RN1	RH-4103-16	RES RN 10K X 9 BUSSED	EA	1.00	BOURNS	4610X-101-103
					DALE	CSC10A-01-103G
					PANASONIC	EXB-R89103K
RN2	RH-4104-16	RES RN 100K X 9 BUSSED 2% SIP	EA	2.00	ALLEN-BRADLEY	710A104
					BOURNS	4610X-101-104
					DALE	CSC10A-01-104J
RN3	RH-4104-16	RES RN 100K X 9 BUSSED 2% SIP	EA	-		
U1	12-7651-02	IC 80C188 16BIT UPROCESSOR PKG=J68 TMP=C	EA	1.00	INTEL	N80C188
U2	12-7531-00	IC 74HC573 OCTAL D LATCH PKG=P20 TMP=I	EA	1.00	MOTOROLA	MC74HC573
					NATIONAL	MM74HC573N
					RCA	CD74HC573
					SSS	SS74HC573
					TI	SN74HC573N
U3	12-7181-00	IC 74HC74 DUAL FLIP/FLOP PKG=P14 TMP=I	EA	2.00	FAIRCHILD	74HC74
					HITACHI	HD74HC74P
					MITSUBISHI	M74HC74
					MOTOROLA	MC74HC74N
					NATIONAL	MM74HC74N
					RCA	CD74HC74E
					SIGNETICS	74HC74
					SSS	SS74HC74
					TI	SN74HC74N
U4	60-0326-00	PROG PROM BOOT ROM NAV 2000 VER 1.02	EA	1.00	JCAIR	60-0326-00
U5	12-7686-00	IC 55257 32K X 8 RAM PKG=P28 SPD=120NS	EA	1.00	SHARP	LH52B256-10LL
					TOSHIBA	TC55257P-12
U6	12-8053-00	IC 74AC573 OCTAL D-LATCH PKG=P20 TMP=M	EA	1.00	MOTOROLA	MC74AC573N
					NATIONAL	74AC573P
					RCA	CD74AC573E
					TI	SN74AC573N
U7	12-7625-00	IC 74HC139 DUAL 2-4 LN DECODER/DEMULTPLX	EA	1.00	MOTOROLA	MC74HC139
					NATIONAL	MM74HC139N
					RCA	CD74HC139
					SSS	SS74HC139
					TI	SN74HC139N
U8	12-7552-00	IC 74HC08 QUAD AND GATE PKG=P14 TMP=I	EA	2.00	MOTOROLA	MC74HC08N
					NATIONAL	MM74HC08N
					RCA	CD74HC08E
					TI	SN74HC08N
U9	12-7264-00	IC 74HC04 HEX INVERTER PKG=P14 TMP=I	EA	2.00	MOTOROLA	MC74HC04N
					NATIONAL	MM74HC04N
					RCA	CD74HC04E
					SSS	SS74HC04N
					TI	SN74HC04N

NAME: CPU BD W/+7DBM & RPP NAV2000R ASSY NO: 20-5742-03

REVISION: 01 DATE: 10/16/1998

ITEM/ SYMBOL	JcAIR PART NO.	DESCRIPTION	U/M	QTY	MANUFACTURER	MANF'S P/N
U10	12-7553-00	IC 74HC32 QUAD OR GATE PKG=P14 TMP=I	EA	2.00	MOTOROLA	MC74HC32N
					NATIONAL	MM74HC32N
					RCA	CD74HC32E
					TI	SN74HC32N
U11	12-8056-00	IC 117 ADJ POS REGULATOR PKG=TO39 TMP=M	EA	1.00	NATIONAL	LM117H
U13	60-0403-30	PROG PROM APPL -80 NAV 2000R VER 1.00	EA	1.00	JCAIR	60-0403-30
U14	12-7924-10	IC 1230 NVL SRAM PKG=P28 TMP=C SPD=150NS	EA	1.00	DALLAS SEMI	DS1230AB-150 (NO SUBSTITUTE)
U15	12-7989-00	IC 74HC4538 MULTIVIBRATOR PKG=P16 TMP=I	EA	1.00	SIGNETICS	74HC4538N
U16	12-7264-00	IC 74HC04 HEX INVERTER PKG=P14 TMP=I	EA	-		
U17	12-7553-00	IC 74HC32 QUAD OR GATE PKG=P14 TMP=I	EA	-		
U18	12-7552-00	IC 74HC08 QUAD AND GATE PKG=P14 TMP=I	EA	-		
U19	12-7601-00	IC 74HC245 BUS TRANSCEIVER PKG=P20 TMP=I	EA	1.00	MOTOROLA	MC74HC245N
					NATIONAL	MM74HC245N
					RCA	CD74HC245E
					TI	SN74HC245N
U20	12-7600-00	IC 74HC541 OCTL BFR/LINE DRV PKG=P20 T=I	EA	3.00	MOTOROLA	MC74HC541N
					NATIONAL	MM74HC541N
					RCA	CD74HC541E
U21	12-7600-00	IC 74HC541 OCTL BFR/LINE DRV PKG=P20 T=I	EA	-		
U22	12-7633-00	IC 8291A UPROCESSER GPIB TLK/LSTNR INTFC	EA	1.00	INTEL	8291A
U23	12-7434-00	IC 75161 IEEE-488 TRANSCEIVER	EA	1.00	NATIONAL	DS75161A
					TI	SN75161B
U24	12-7435-00	IC 75160 IEEE-488 TRANCEIVER	EA	1.00	NATIONAL	DS75160A
					TI	SN75160B
U28	12-7763-00	IC 8256A UPROCESSOR SUPPORT CONTROLLER	EA	1.00	INTEL	P8256AH
U30	12-7653-21	IC EP320 DC-1 PROGRAMMABLE LOGIC DEVICE	EA	1.00	ALTERA	EP320 DC-1
U31	12-7555-00	IC 74HC157 QUAD 2 TO 1 MUX PKG=P16 TMP=I	EA	2.00	MOTOROLA	MC74HC157P
					TI	SN74HC157N
U32	12-7555-00	IC 74HC157 QUAD 2 TO 1 MUX PKG=P16 TMP=I	EA	-		
U33	12-7798-00	IC 42C4064 64KX4 DRAM PKG=P24 SPD=120NS	EA	2.00	HITACHI	HM53461P-12
					MICRON TECH	MT42C4064-12
U34	12-7798-00	IC 42C4064 64KX4 DRAM PKG=P24 SPD=120NS	EA	-		
U35	12-7654-22	IC EPLD 600 GATE PKG=D24 TMP=C SPD=35NS	EA	1.00	ALTERA	EP610 DC-35
U36	12-7802-00	IC 74AC251 MUX W/3-ST O/P PKG=P14 TMP=I	EA	1.00	NATIONAL	74AC251PC
U37	12-7803-00	IC 74AC174 HEX FF W/RESET PKG=P16 TMP=C	EA	1.00	NATIONAL	74AC174PC
U38	12-7181-00	IC 74HC74 DUAL FLIP/FLOP PKG=P14 TMP=I	EA	-		
U39	12-7600-00	IC 74HC541 OCTL BFR/LINE DRV PKG=P20 T=I	EA	-		
XU1	33-0011-68	SOCKET PLCC 68 PIN SOLDER TAIL	EA	1.00	AMP	641749-2
XU4	33-0007-28	SOCKET 28 PIN DIP MACH PIN .6 SP	EA	3.00	AUGAT	528-AG11D
XU5	33-0007-28	SOCKET 28 PIN DIP MACH PIN .6 SP	EA	-		
XU13	33-0007-32	SOCKET 32 PIN DIP MACH PIN .6 SP	EA	1.00	AUGAT	532-AG11D
XU14	33-0007-28	SOCKET 28 PIN DIP MACH PIN .6 SP	EA	-		
XU22	33-0007-40	SOCKET 40 PIN DIP MACH PIN .6 SP	EA	2.00	AUGAT	540-AG11D
XU28	33-0007-40	SOCKET 40 PIN DIP MACH PIN .6 SP	EA	-		
XU30	33-0007-20	SOCKET 20 PIN DIP MACH PIN .3 SP	EA	1.00	AUGAT	520-AG11D

JcAIR INC.

NAME: CPU BD W/+7DBM & RPP NAV2000R ASSY NO: 20-5742-03

REVISION: 01 DATE: 10/16/1998

ITEM/ SYMBOL	JcAIR PART NO.	DESCRIPTION	U/M	QTY	MANUFACTURER	MANF'S P/N
XU35	33-0008-24	SOCKET 24 PIN DIP OPEN LADDER MCHD .3 SP	EA	1.00	ASSMANN	AR24-HGL/7
					AUGAT	824-AG31D
					MCKENZIE	DIP-324-001B
					TI	C72243-59
Y1	44-0068-00	XTAL 16.384 MHZ PARALLEL 20 PF HC49U	EA	1.00	FOX	HC49U 16.384MHZ
REF1	02-5742-00	SCHEMATIC CPU BOARD	EA	-		
REF2	25-5742-01	ASSY DWG CPU BOARD NAV2000R	EA	-		
REF3	04-5742-00	TEST PROCEDURE NAV 2000R CPU BOARD	EA	-		

REVISIONS			
REV.	DESCRIPTION	DATE	APPROVED

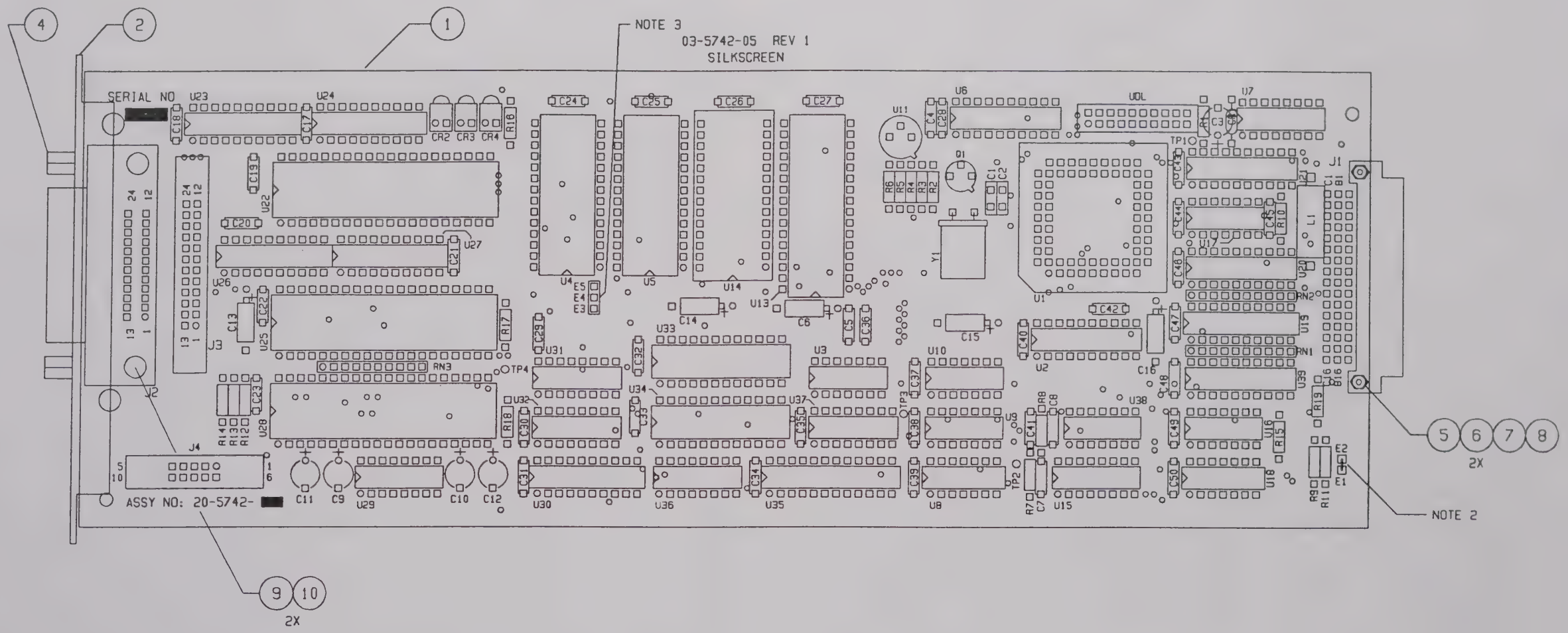

NOTES:

1. FOR COMPLETE ITEM DESCRIPTION REFERENCE BILL OF MATERIALS 20-5742-01.
2. JUMPER E1 TO E2.
3. JUMPER E3 TO E4.
4. CUT TRACE SOLDER SIDE BETWEEN U30-1 AND U35-1.
5. JUMPER FROM U30-1 AND U28-17.

	QTY REQD	FSCM NO.	PART OR IDENTIFYING NO.	NOMENCLATURE OR DESCRIPTION	MATERIAL SPECIFICATION	
PARTS LIST						

	NAV 2000R
NEXT ASSY	USED ON
APPLICATION	

UNLESS OTHERWISE SPECIFIED DIMENSIONS ARE IN INCHES
TOLERANCES ARE:
FRACTIONS ± DECIMALS .XX ± .XXX ANGLES ±

MATERIAL

FINISH

DO NOT SCALE DRAWING

CONTRACT NO.

APPROVALS	DATE
DRAWN NRH	5-28-91
CHECKED Dev KT	2/22/93
ISSUED	

JcAIR INC.
400 INDUSTRIAL PKWY, INDUSTRIAL AIRPORT KS., 66031

CPU BOARD

SIZE	FSCM NO.	DWG. NO.	REV.
B		25-5742-01	0

SCALE 1:1 | UNIT: VARIOUS | SHEET 1 OF 1

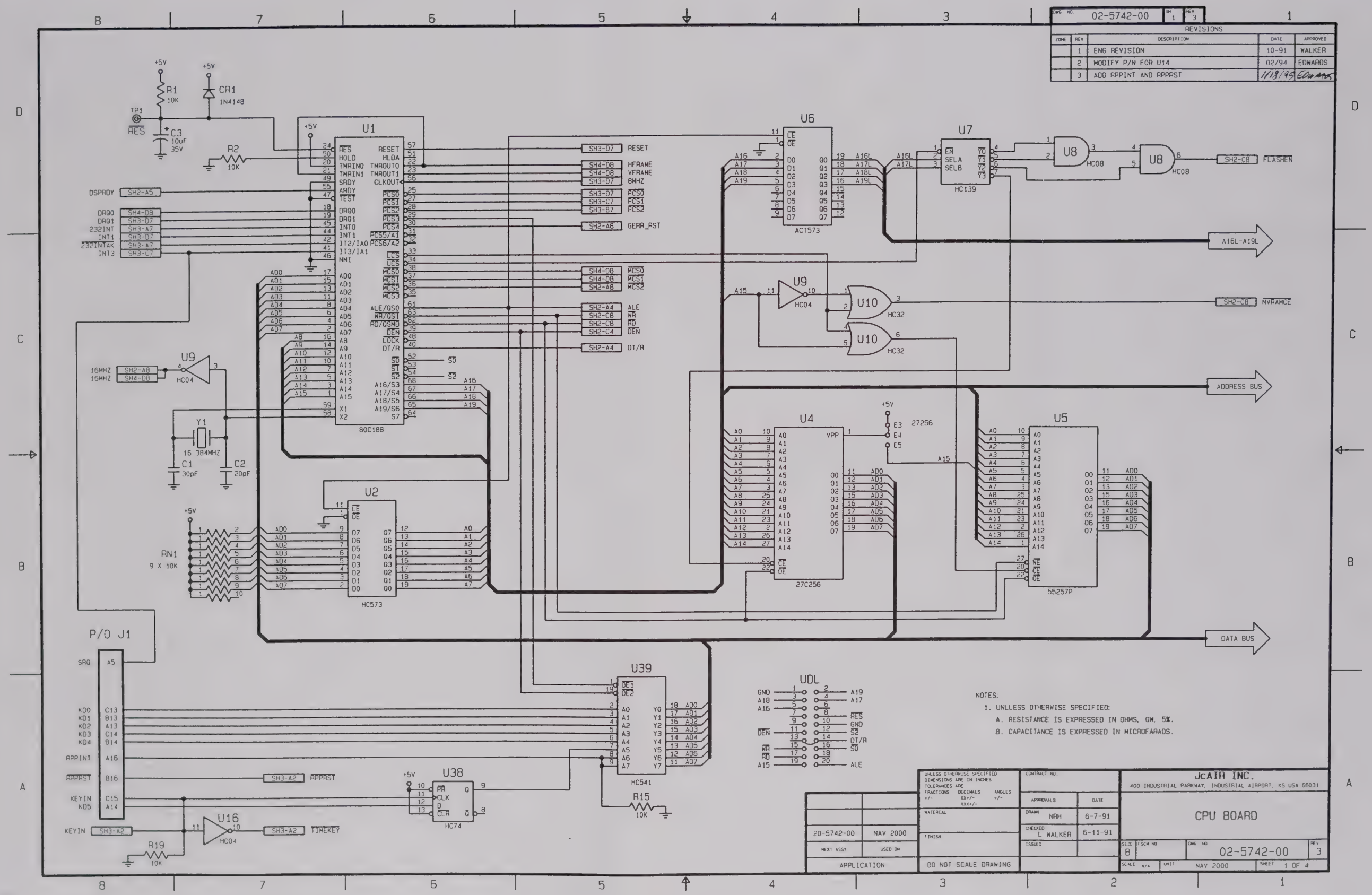

DWG NO. 02-5742-00
SH 1
REV 3
REVISIONS
ZONE REV DESCRIPTION DATE APPROVED
1 ENG REVISION 10-91 WALKER
2 MODIFY P/N FOR U14 02/94 EDWARDS
3 ADD RPPINT AND RPPRST 1/18/95 EDWARDS
U1
80C188
U2
HC573
U4
27C256
U5
55257P
U6
ACT573
U7
HC139
U8
HC08
U9
HC04
U10
HC32
U16
HC04
U38
HC74
U39
HC541
U0L
P/O J1
Y1
16 384MHZ
C1
30pF
C2
20pF
C3
10uF
35V
R1
10K
R2
10K
R15
10K
R19
10K
CR1
1N4148
TP1
RES
RN1
9 X 10K
DSPRDY
DRQ0
DRQ1
232INT
INT1
232INTAK
INT3
16MHZ
RESET
HFRAME
VFRAME
BMHZ
GERR_RST
ALE
DT/R
FLASHEN
NVRAMCE
A16L-A19L
ADDRESS BUS
DATA BUS
RPPRST
TIMEKEY
NOTES:
1. UNLLESS OTHERWISE SPECIFIED:
A. RESISTANCE IS EXPRESSED IN OHMS, QW, 5%.
B. CAPACITANCE IS EXPRESSED IN MICROFARADS.
20-5742-00
NAV 2000
NEXT ASSY
USED ON
APPLICATION
UNLESS OTHERWISE SPECIFIED DIMENSIONS ARE IN INCHES TOLERANCES ARE
FRACTIONS DECIMALS ANGLES
MATERIAL
FINISH
DO NOT SCALE DRAWING
CONTRACT NO.
APPROVALS
DATE
DRAWN NRH 6-7-91
CHECKED L WALKER 6-11-91
ISSUED
JcAIR INC.
400 INDUSTRIAL PARKWAY, INDUSTRIAL AIRPORT, KS USA 66031
CPU BOARD
SIZE B
FSCM NO
DWG NO 02-5742-00
REV 3
SCALE N/A
UNIT NAV 2000
SHEET 1 OF 4

DATA BUS

ADDRESS BUS

U11 LM117H VIN VOUT ADJ
+15V
C4 0.1uF
R5 2.43K
R6 274
C5 0.1uF
C6 1.0uF 35V
R4 1.18K EW, 1%
Q1 2N2222A
R3 274 EW, 1%
U18 HC08
+5V
VPPEN SH3-A2

U13 28F010
U14 DS1230
FLASHEN SH1-D1
NVRAMCE SH1-C1
AD SH1-C5
WR SH1-C5

U15 HC4538 (70uS)
NVSTAB SH3-A2
R7 10K
C7 0.01uF
TP2

U9 HC04
U8 HC08
U10 HC32
A14

U19 HC245
RN2 9 X 100K
P/O J1
U20 HC541
U21 HC541
U7 HC139
R10 100K

DEN SH1-C5
BUSDSP SH3-A2
U17 HC32
R11 100K

RESET SH1-D5
DAST SH3-A2
U16 HC04
P/O J1
BUS GRANTED C11
R9 1K
U3 HC74
16MHZ SH1-C8
MCS2 SH1-C5
R8 10K
C8 680pF
U15 HC4538 (4.8uS)
U17 HC32
DSPRDY SH3-D8
U38 HC74
GRANT_ERR SH3-A7
TP3
GEAR_RST SH1-D5
ALE SH1-C5
DT/R SH1-C5

DRAWN NRH		SIZE B	FSCM NO.	DWG. NO. 02-5742-00	REV 3
ISSUED		SCALE N/A	UNIT: NAV 2000		SHEET 2 OF 4

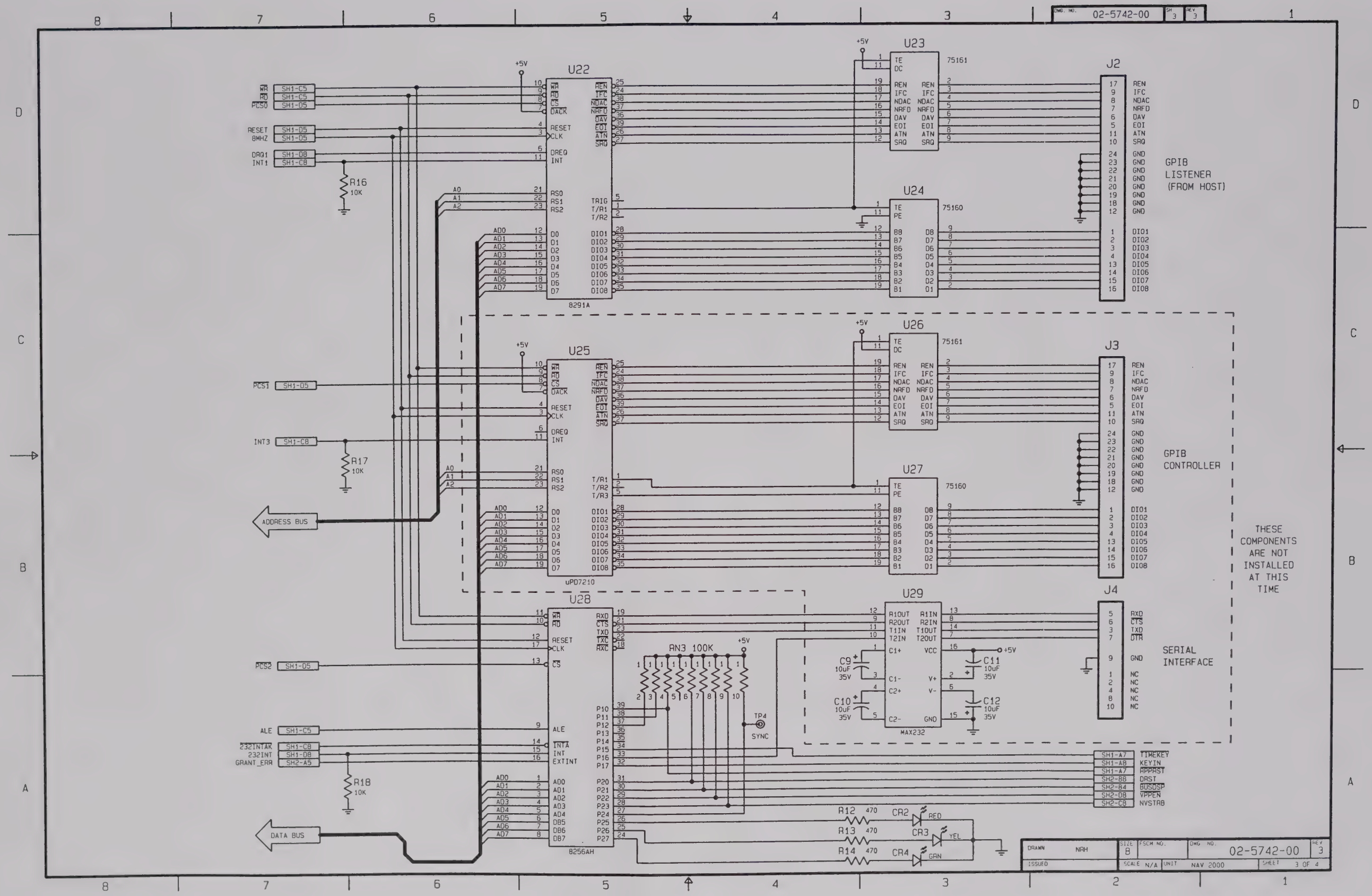
DWG. NO. 02-5742-00
SH 3
REV 3
U22
8291A
U23
75161
U24
75160
J2
GPIB
LISTENER
(FROM HOST)
U25
uPD7210
U26
75161
U27
75160
J3
GPIB
CONTROLLER
THESE
COMPONENTS
ARE NOT
INSTALLED
AT THIS
TIME
U28
8256AH
U29
MAX232
J4
SERIAL
INTERFACE
RN3 100K
R16 10K
R17 10K
R18 10K
TP4
SYNC
ADDRESS BUS
DATA BUS
R12 470
R13 470
R14 470
CR2 RED
CR3 YEL
CR4 GRN
C9 10uF 35V
C10 10uF 35V
C11 10uF 35V
C12 10uF 35V
DRAWN NAH
ISSUED
SIZE B
FSCM NO.
DWG. NO. 02-5742-00
REV 3
SCALE N/A
UNIT
NAV 2000
SHEET 3 OF 4

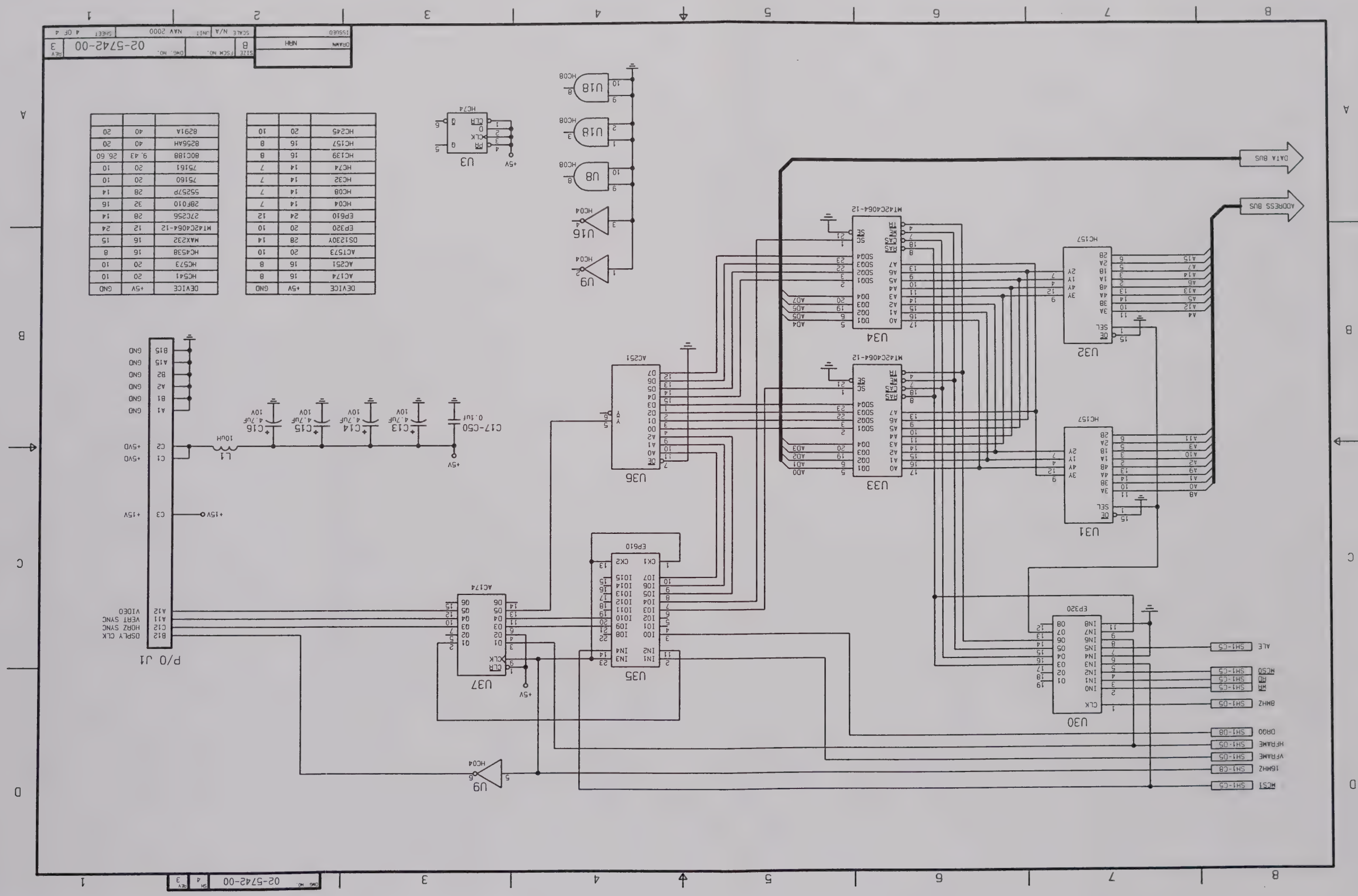

DEVICE	+5V	GND
AC174	16	8
AC251	16	8
DS1230Y	28	14
EP320	20	10
EP610	24	12
HC04	14	7
HC08	14	7
HC32	14	7
HC74	14	7
HC139	16	8
HC157	16	8
HC245	20	10

DEVICE	+5V	GND
HC541	20	10
HC573	20	10
HC4538	16	8
MAX232	16	15
MT42C4064-12	12	24
27C256	28	14
28F010	32	16
55257P	28	14
75160	20	10
75161	20	10
80C188	9, 43	26, 60
8256AH	40	20
8291A	40	20

SIZE B | FSCM NO. | DWG. NO. 02-5742-00 | REV 3
DRAWN NRH | ISSUED | SCALE N/A | UNIT NAV 2000 | SHEET 4 OF 4

JcAIR INC.

NAME: DSP BOARD NAV 2000 ASSY NO: 20-5743-10

REVISION: 07 DATE: 11/01/2000

ITEM/ SYMBOL	JcAIR PART NO.	DESCRIPTION	U/M	QTY	MANUFACTURER	MANF'S P/N
1	09-5743-00	PCB DSP NAV2000	EA	1.00	QMC	09-5743-00
2	47-1852-06	PLATE MOUNTING PCB NAV 2000	EA	1.00	JCAIR	47-1852-06
3	76-3402-03	SUPPORT BLOCK NAV 2000	EA	2.00	JCAIR	76-3402-03
4	89-2104-04	SCREW PHP #4-40 X .250 STAINLESS	EA	4.00	MIL SPEC	MS51957-13
5	89-0904-00	WASHER LOCK #4	EA	4.00	MIL SPEC	MS35338-135
					MIL SPEC	MS35338-78
6	89-1102-00	NUT HEX #2 SM PAT SS	EA	2.00	NATIONAL AERO	NAS671C2
7	89-9028-00	SCREW SELF-TAPPING PHP #2 TYPE F X .312L	EA	2.00	MIL SPEC	MS24629F-4
8	30-0042-02	CONN BNC LOCKWASHER	EA	1.00	AMP	1-329632-2
9	30-0042-03	CONN BNC JAMNUT	EA	1.00	AMP	1-329631-2
10	89-2102-07	SCREW PHP #2-56 X .438	EA	2.00	MIL SPEC	MS51957-6
11	89-0902-00	WASHER LOCK #2	EA	2.00	MIL SPEC	MS35338-134
12	89-0102-00	WASHER FLAT #2 .150 OD (SML PAT)	EA	1.00	NATIONAL AERO	NAS620C2
13	89-3102-03	SCREW FHP #2-56 X .188 SS 100 DEG	EA	4.00	NATIONAL AERO	NAS662C2R3
C1	CG-1332-11	CAP MC 3300PF 100V 10% COG	EA	2.00	KEMET	C322C332CK1G5CA
C2	CG-0331-11	CAP MC 330PF 100V 10% COG	EA	1.00	KEMET	C315C331K1G5CA
C3	CG-1332-11	CAP MC 3300PF 100V 10% COG	EA	-		
C4	CG-0101-12	CAP MC 100PF 200V 10% COG	EA	4.00	KEMET	C315C101K2G5CA
C21	CH-0104-00	CAP CK .1UF 50V 10%	EA	15.00	KEMET	C052K104K5X5CA
					MALLORY	CK05BX104K
					MIL SPEC	M39014/01-1473
					MIL SPEC	M39014/01-1553V
					SPRAGUE	CK05BX104K
C22	CB-1475-01	CAP TN 4.7UF 10V 10%	EA	5.00	KEMET	T110A475K010AS
					MALLORY	TAC475K010P02
					MIL SPEC	M39003/01-2254
					SPRAGUE	150D475X9010A2
C31	CH-0104-00	CAP CK .1UF 50V 10%	EA	-		
C32	CB-1475-01	CAP TN 4.7UF 10V 10%	EA	-		
C33	CH-0104-00	CAP CK .1UF 50V 10%	EA	-		
C34	CB-1475-01	CAP TN 4.7UF 10V 10%	EA	-		
C35	CB-1475-01	CAP TN 4.7UF 10V 10%	EA	-		
C36	CH-0104-00	CAP CK .1UF 50V 10%	EA	-		
C37	CB-1475-01	CAP TN 4.7UF 10V 10%	EA	-		
C38	CH-0104-00	CAP CK .1UF 50V 10%	EA	-		
C39	CH-0104-00	CAP CK .1UF 50V 10%	EA	-		
C40	CH-0104-00	CAP CK .1UF 50V 10%	EA	-		
C41	CH-0104-00	CAP CK .1UF 50V 10%	EA	-		
C42	CH-0104-00	CAP CK .1UF 50V 10%	EA	-		
C43	CB-1336-01	CAP TN 33UF 10V 10%	EA	4.00	KEMET	T110B336K010AS
					MIL SPEC	M39003/01-2257
C44	CB-1336-01	CAP TN 33UF 10V 10%	EA	-		
C45	CB-1336-01	CAP TN 33UF 10V 10%	EA	-		
C46	CB-1336-01	CAP TN 33UF 10V 10%	EA	-		

NAME: DSP BOARD NAV 2000 ASSY NO: 20-5743-10

REVISION: 07 DATE: 11/01/2000

ITEM/ SYMBOL	JcAIR PART NO.	DESCRIPTION	U/M	QTY	MANUFACTURER	MANF'S P/N
C47	CH-0104-00	CAP CK .1UF 50V 10%	EA	-		
C48	CH-0103-00	CAP CK .01UF 50V 10%	EA	12.00	MALLORY	CK05BX103K
C49	CH-0104-00	CAP CK .1UF 50V 10%	EA	-		
C50	CH-0104-00	CAP CK .1UF 50V 10%	EA	-		
C51	CH-0103-00	CAP CK .01UF 50V 10%	EA	-		
C52	CH-0104-00	CAP CK .1UF 50V 10%	EA	-		
C53	CH-0104-00	CAP CK .1UF 50V 10%	EA	-		
C54	CH-0104-00	CAP CK .1UF 50V 10%	EA	-		
C55	CH-0103-00	CAP CK .01UF 50V 10%	EA	-		
C56	CH-0103-00	CAP CK .01UF 50V 10%	EA	-		
C57	CH-0103-00	CAP CK .01UF 50V 10%	EA	-		
C58	CH-0103-00	CAP CK .01UF 50V 10%	EA	-		
C59	CH-0103-00	CAP CK .01UF 50V 10%	EA	-		
C60	CH-0103-00	CAP CK .01UF 50V 10%	EA	-		
C61	CH-0103-00	CAP CK .01UF 50V 10%	EA	-		
C62	CH-0103-00	CAP CK .01UF 50V 10%	EA	-		
C63	CH-0103-00	CAP CK .01UF 50V 10%	EA	-		
C64	CH-0103-00	CAP CK .01UF 50V 10%	EA	-		
C65	CG-0270-12	CAP MC 27PF 200V 10% COG	EA	1.00	KEMET	C315C270K2G5CA
C66	CG-0150-11	CAP MC 15PF 100V 10% COG	EA	1.00	KEMET	C315C150K1G5CA
C67	CR-0018-00	CAP VR 3-15PF 500V	EA	1.00	MURATA	DV11PS15D
C68	CG-0101-12	CAP MC 100PF 200V 10% COG	EA	-		
C69	CG-0101-12	CAP MC 100PF 200V 10% COG	EA	-		
C70	CH-0101-20	CAP CK 100PF 200V 10%	EA	2.00	SPRAGUE	CK05BX101K
C72	CH-0101-20	CAP CK 100PF 200V 10%	EA	-		
C73	CG-0101-12	CAP MC 100PF 200V 10% COG	EA	-		
J5	30-0039-01	CONN BNC RCPT RT ANG PC MNT METAL	EA	1.00	AMP	227433-1
L1	19-2153-03	INDUCTOR MOLDED 10UH .44A .605 OHM 10%	EA	3.00	DALE	IM-6 10UH 10%
					MIL SPEC	MS75101-7
L2	19-2153-03	INDUCTOR MOLDED 10UH .44A .605 OHM 10%	EA	-		
L3	19-2153-03	INDUCTOR MOLDED 10UH .44A .605 OHM 10%	EA	-		
L4	19-2016-31	INDUCTOR MOLDED 56UH 145MA 5.7 OHM 10%	EA	1.00	DALE	IM-2 56UH 10%
					DELEVAN	1025-62
					JW MILLER	9230-62
					MIL SPEC	MS75085-04
					NYTRONICS	MD-56.0
					VANGUARD	15478
P1	30-5245-48	CONN CARD EDGE TRPL PLUG RT ANG 48 POS	EA	1.00	TRW	009-00010-4
					TRW	43-1482
Q1	07-0132-00	XSTR NPN 2N2222A PKG=TO18	EA	1.00	MOTOROLA	2N2222A
R1	RB-0103-23	RES CF 10K QW 5%	EA	5.00	NIC	NCF25-10K-B
R2	RB-0103-23	RES CF 10K QW 5%	EA	-		
R4	RB-0103-23	RES CF 10K QW 5%	EA	-		
R5	RC-4021-12	RES MF 4.02K EW 1%	EA	1.00	DALE	CMF-55 4021FT-1
					MIL SPEC	RN-55D 4021F

NAME: DSP BOARD NAV 2000 ASSY NO: 20-5743-10

REVISION: 07 DATE: 11/01/2000

ITEM/ SYMBOL	JcAIR PART NO.	DESCRIPTION	U/M	QTY	MANUFACTURER	MANF'S P/N
R6	RC-1501-12	RES MF 1.5K EW 1%	EA	3.00	DALE	CMF-55 1501FT-1
					MIL SPEC	RN-55D 1501F
R7	RC-1212-12	RES MF 12.1K EW 1%	EA	1.00	DALE	CMF-55 1212FT-1
					MIL SPEC	RN-55D 1212F
R8	RC-1501-12	RES MF 1.5K EW 1%	EA	-		
R9	RJ-0052-15	RES VR 5K 15T 10%	EA	1.00	ALLEN-BRADLEY	94P502
					BOURNS	3006P-1-502
R10	RC-1501-12	RES MF 1.5K EW 1%	EA	-		
R11	RC-4991-12	RES MF 4.99K EW 1%	EA	1.00	DALE	CMF-55 4991FT-1
					MIL SPEC	RN-55D 4991F
R12	RC-1002-12	RES MF 10K EW 1%	EA	1.00	DALE	CMF-55 1002FT-1
					MIL SPEC	RN-55D 1002F
R43	RB-0103-23	RES CF 10K QW 5%	EA	-		
R45	RB-0103-23	RES CF 10K QW 5%	EA	-		
R46	RC-2001-12	RES MF 2K EW 1%	EA	1.00	DALE	CMF-55 2001FT-1
					MIL SPEC	RN-55D 2001F
R48	RB-0105-23	RES CF 1M QW 5%	EA	1.00	NIC	NCF25-1M-B
R49	RB-0222-23	RES CF 2.2K QW 5%	EA	1.00	NIC	NCF25-2.2K-B
RN1	RH-4103-12	RES RN 10K X 5 BUSSED	EA	1.00	BOURNS	4606X-101-103
RN2	RH-4103-16	RES RN 10K X 9 BUSSED	EA	3.00	BOURNS	4610X-101-103
					DALE	CSC10A-01-103G
					PANASONIC	EXB-R89103K
RN3	RH-4103-16	RES RN 10K X 9 BUSSED	EA	-		
RN4	RH-4103-16	RES RN 10K X 9 BUSSED	EA	-		
U1	12-8043-00	IC 2105 DSP MICROCOMPUTER PKG=L68 TMP=C	EA	1.00	ANALOG DEVICES	ADSP-2105KP-40
U3	12-8041-00	IC 74AC14 SCHMITT TRIGGER PKG=P14 TMP=M	EA	1.00	RCA	CD74AC14E
U4	12-8038-00	IC 74AC08 QUAD AND GATE PKG=P14 TMP=M	EA	1.00	RCA	CD74AC08E
U5	12-7856-00	IC 74AC109 DUAL JK F/F PKG=P16 TMP=M	EA	2.00	RCA	CD74AC109E
U6	12-7856-00	IC 74AC109 DUAL JK F/F PKG=P16 TMP=M	EA	-		
U7	12-8045-00	IC 3434 DIGITAL FILTER PKG=P16 TMP=O	EA	1.00	YAMAHA	YM3434
U8	12-8050-00	IC 74AC245 TRANSCEIVER PKG=P20 TMP=M	EA	2.00	RCA	CD74AC245E
U9	12-8052-00	IC 74AC373 OCTAL LATCH PKG=P20 TMP=M	EA	1.00	MOTOROLA	MC74AC373N
					NATIONAL	74AC373P
					RCA	CD74AC373E
					TI	SN74AC373N
U10	12-8050-00	IC 74AC245 TRANSCEIVER PKG=P20 TMP=M	EA	-		
U11	60-0318-00	PROG PROM SIN TABLE LO BYTE VER 1.00	EA	1.00	JCAIR	60-0318-00
U12	60-0317-00	PROG PROM SIN TABLE HIGH BYTE VER 1.00	EA	1.00	JCAIR	60-0317-00
U13	12-7623-00	IC 6264 RAM PKG=P28 TMP=O SPD=100NS	EA	1.00	HITACHI	HM6264BLPI-10
					NEC	UPD4364C12-L
					SHARP	LH5164A-10L
U15	12-8047-00	IC 1856 PCM AUDIO DAC PKG=P16 TMP=C	EA	1.00	ANALOG DEVICES	AD1856N
U17	12-7911-00	IC 713 BIFET OP AMP PKG=P14 TMP=C	EA	1.00	ANALOG DEVICES	AD713JN
U20	12-7751-00	IC 74AC32 QUAD OR GATE PKG=P14 TMP=I	EA	1.00	RCA	CD74AC32E
XU1	33-0011-68	SOCKET PLCC 68 PIN SOLDER TAIL	EA	1.00	AMP	641749-2

NAME: DSP BOARD NAV 2000

ASSY NO: 20-5743-10

REVISION: 07

DATE: 11/01/2000

ITEM/ SYMBOL	JcAIR PART NO.	DESCRIPTION	U/M	QTY	MANUFACTURER	MANF'S P/N
XU11	33-0008-28	SOCKET 28 PIN DIP OPEN LADDER MACHINED	EA	3.00	ASSMANN	AR28-HGL
					AUGAT	828-AG11D
					ROBINSON-NUGENT	ICT-283-S-TG30
					SPC	MP-28-3G
XU12	33-0008-28	SOCKET 28 PIN DIP OPEN LADDER MACHINED	EA	-		
XU13	33-0008-28	SOCKET 28 PIN DIP OPEN LADDER MACHINED	EA	-		
Y1	44-0070-00	XTAL 20.398 MHZ PARALLEL RESONATE HC49/U	EA	1.00	ELECTRO DYNAMIC	JC020398
REF1	25-5743-10	ASSY DWG DSP BOARD NAV 2000R	EA	-		
REF2	02-5743-10	SCHEMATIC, DSP BOARD	EA	-		
REF3	40-5743-00	BLOCK DIAGRAM DSP CARD NAV 2000	EA	-		

REVISIONS			
REV	DESCRIPTION	DATE	APPROVED
1	UPDATE PER REV 1 ARTWORK	5-28-91	D HAVENER
2	ADD C73 ACROSS R11	6-26-91	D HAVENER
3	REMOVE ITEMS 4 & 5 BY ITEM 2 AND ADD ITEM 13	9/30/94	M.K.S.

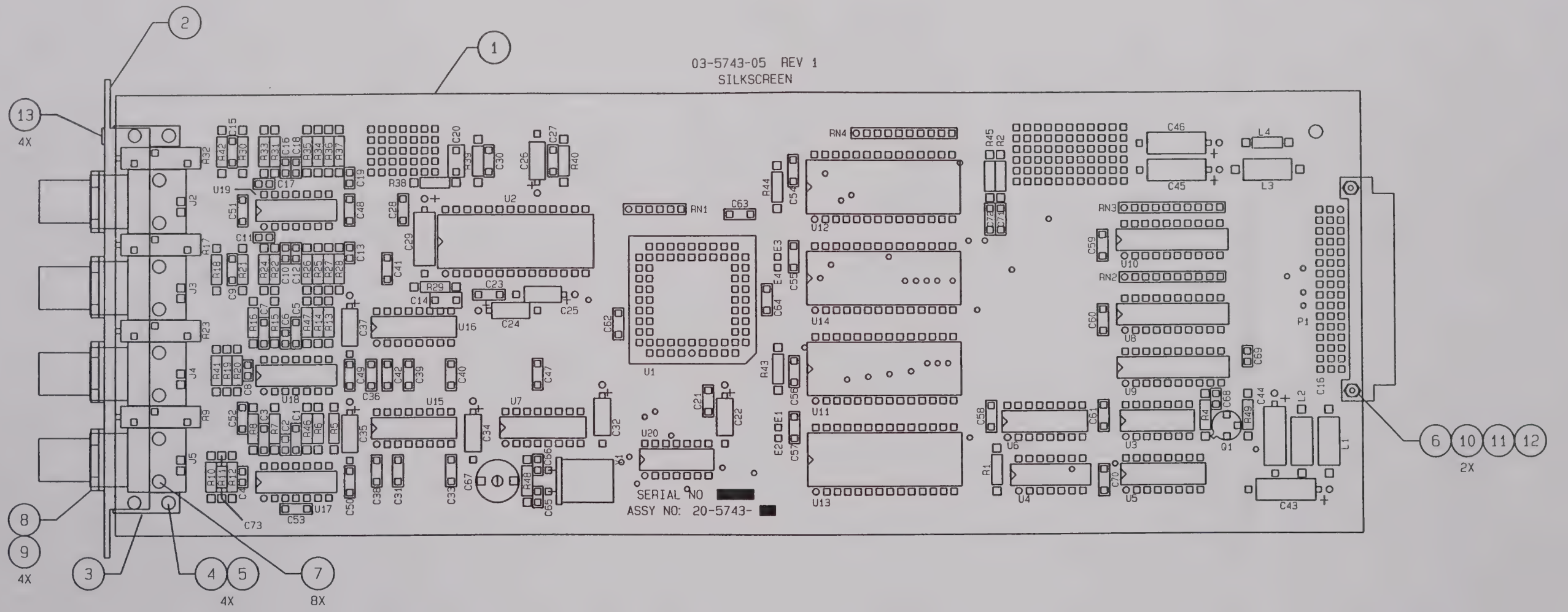

NOTES:

1. FOR COMPLETE ITEM DESCRIPTION REFERENCE BILL OF MATERIALS 20-5743-00 OR 20-5743-10.
2. ADD C73 ACROSS R11 AS SHOWN.

20-5743-10	01-0520-XX
NEXT ASS'Y	USED ON
UNIT	NAV 2000/2000R

DIMENSIONS ARE IN INCHES
TOLERANCES ARE:
DECIMALS: XX ± .01, XXX ± .005
FRACTIONS: ± 1/64
ANGLES: ±1/2 DEG

MATERIAL: FR4 .062 THK 1 OZ CU

FINISH: NA

BFGOODRICH AEROSPACE PROPRIETARY INFORMATION

APPROVALS	DATE
DRAWN NAH	5-28-91
CHECKED HAVENER	6-26-91
ISSUED	
FILE NAME 676200R0.PCB	

BFGoodrich Aerospace
JcAIR Test Systems
400 NEW CENTURY PARKWAY
NEW CENTURY, KS 66031-0009 USA
PHONE (913) 764-2452
FAX (913) 782-5104

ASSEMBLY
DSP BOARD

SIZE	CAGE NO	DWG. NO	REV
B	41364	25-5743-00/10	3

SHEET 1 OF 1

REV	DESCRIPTION	DATE	APPROVED
1	RENAME J1 TO P1		
2	ADD C73 ACROSS R11		
3	CHANGE VALUE OF R11 FROM		
4	CHANGE J5 SYMBOL	C7-26-2001	

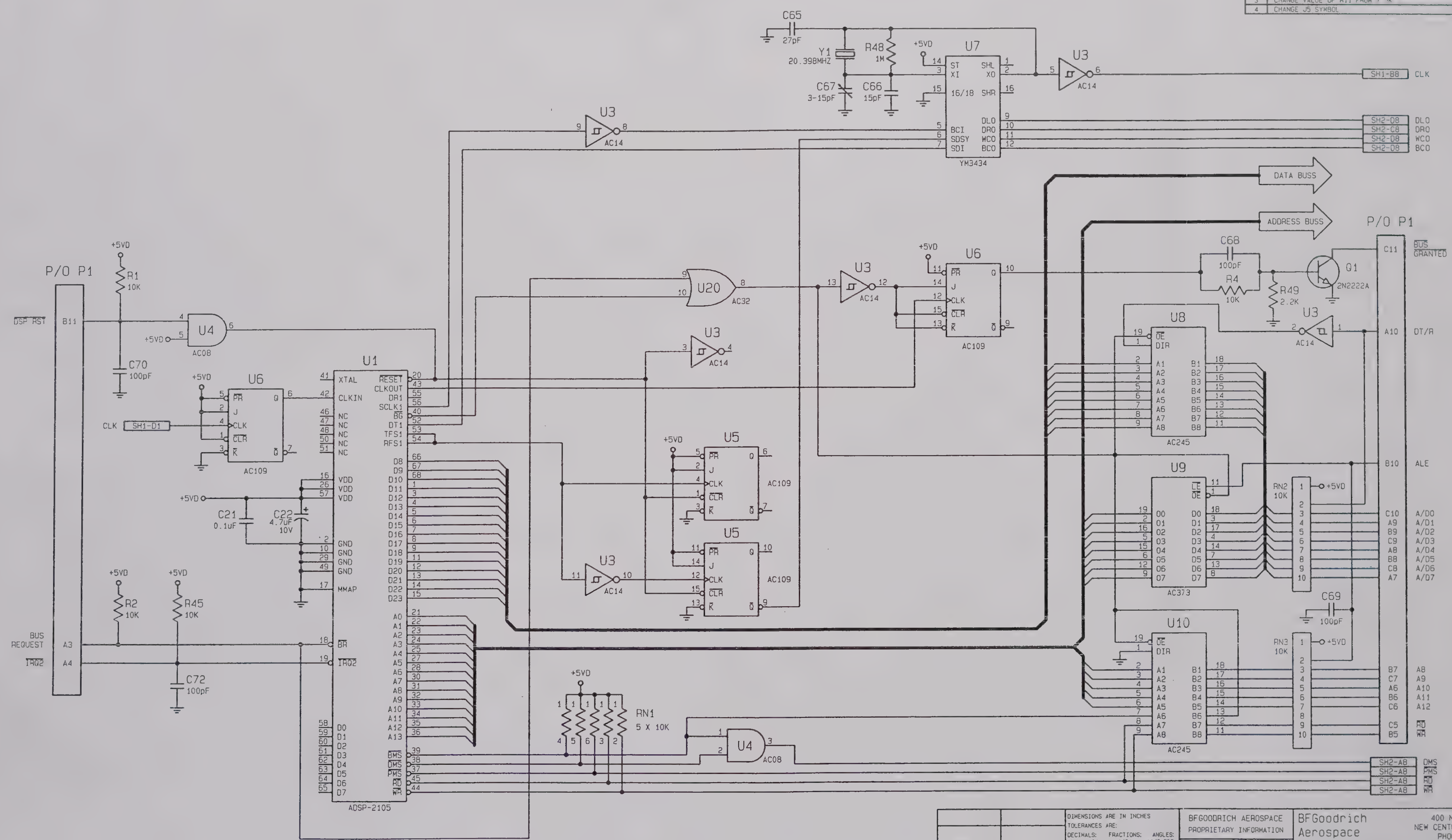

		DIMENSIONS ARE IN INCHES TOLERANCES ARE: DECIMALS: .XX ±.01 .XXX ±.005 FRACTIONS: ± 1/64 ANGLES: ±1/2 DEG	BFGOODRICH AEROSPACE PROPRIETARY INFORMATION	BFGoodrich Aerospace JcAIR Test Systems	400 NEW CENTURY PARKWAY NEW CENTURY, KS 66031-0009 USA PHONE (913) 764-2452 FAX (913) 782-5104
		MATERIAL N/A	APPROVALS / DATE	SCHEMATIC DSP BOARD	
20-5743-10	01-0520-XX		DRAWN NRH 9-16-91		
NEXT ASS'Y	USED ON	FINISH N/A	CHECKED HAVENER 11-22-91	SIZE B CAGE NO. 41364	DWG NO 02-5743-10 REV 4
UNIT NAV 2000R			ISSUED 7/26/01 FILENAME 574310R4.SCH		SHEET 1 OF 3

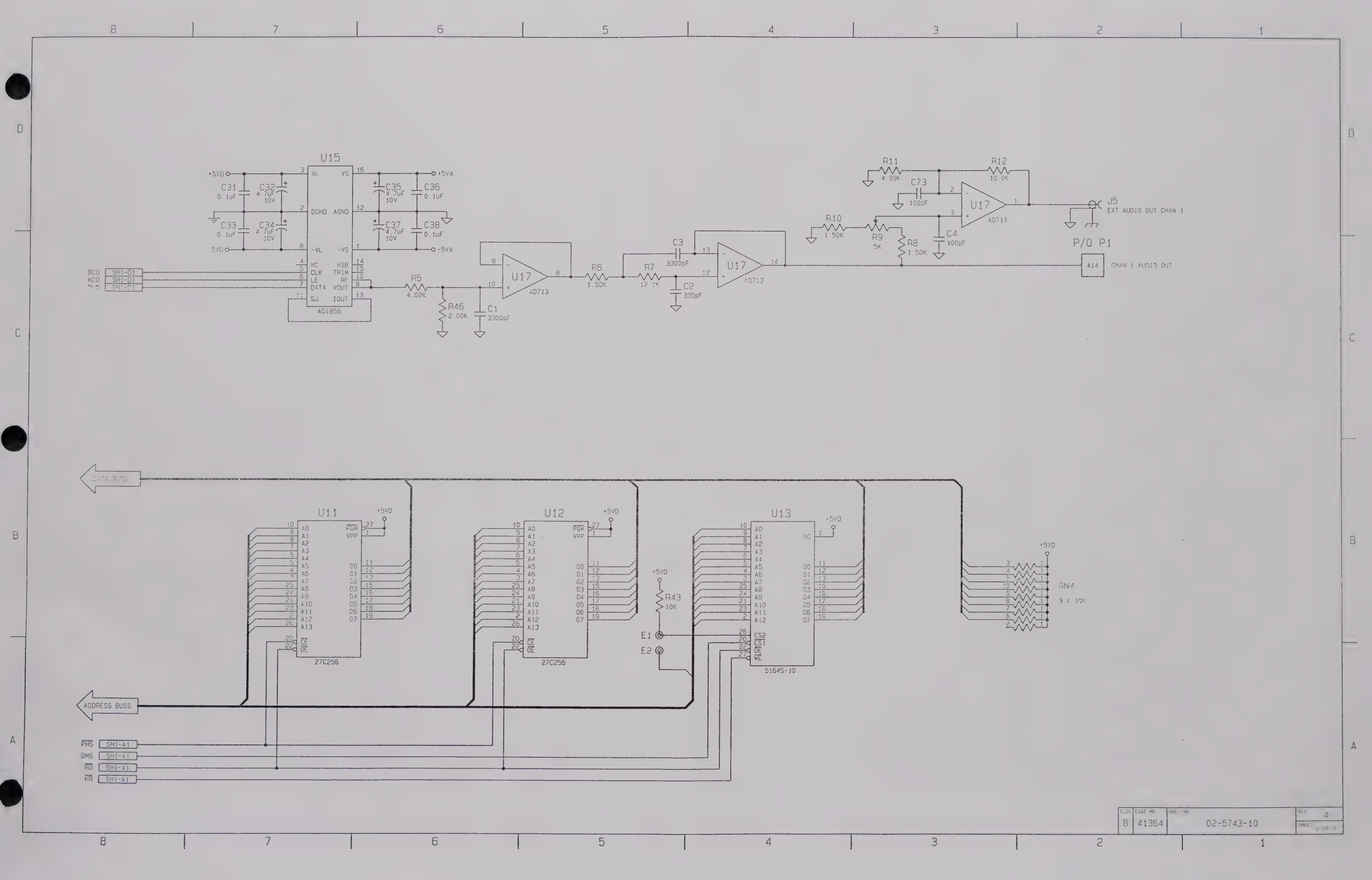
U15
AD1856
+5VD
5VD
+5VA
-5VA
C31 0.1uF
C32 4.7uF 10V
C33 0.1uF
C34 4.7uF 10V
C35 4.7uF 10V
C36 0.1uF
C37 4.7uF 10V
C38 0.1uF
VL
VS
DGND
AGND
-VL
-VS
NC
CLK
LE
DATA
SJ
MSB
TRIM
RF
VOUT
IOUT
BCO
WCO
SH1-D1
R5 4.02K
R46 2.00K
C1 3300pF
U17
AD713
R6 1.50K
R7 12.1K
C3 3300pF
C2 330pF
R11 4.99K
R12 10.0K
C73 100pF
R10 1.50K
R9 5K
R8 1.50K
C4 100pF
J5
EXT AUDIO OUT CHAN 1
P/O P1
A14
CHAN 1 AUDIO OUT
DATA BUSS
U11
U12
U13
27C256
5164S-10
+5VD
R43 10K
E1
E2
RN4
9 X 10K
ADDRESS BUSS
PMS
DMS
RD
WR
SH1-A1
SIZE B
CAGE NO 41364
DWG NO 02-5743-10
REV 4

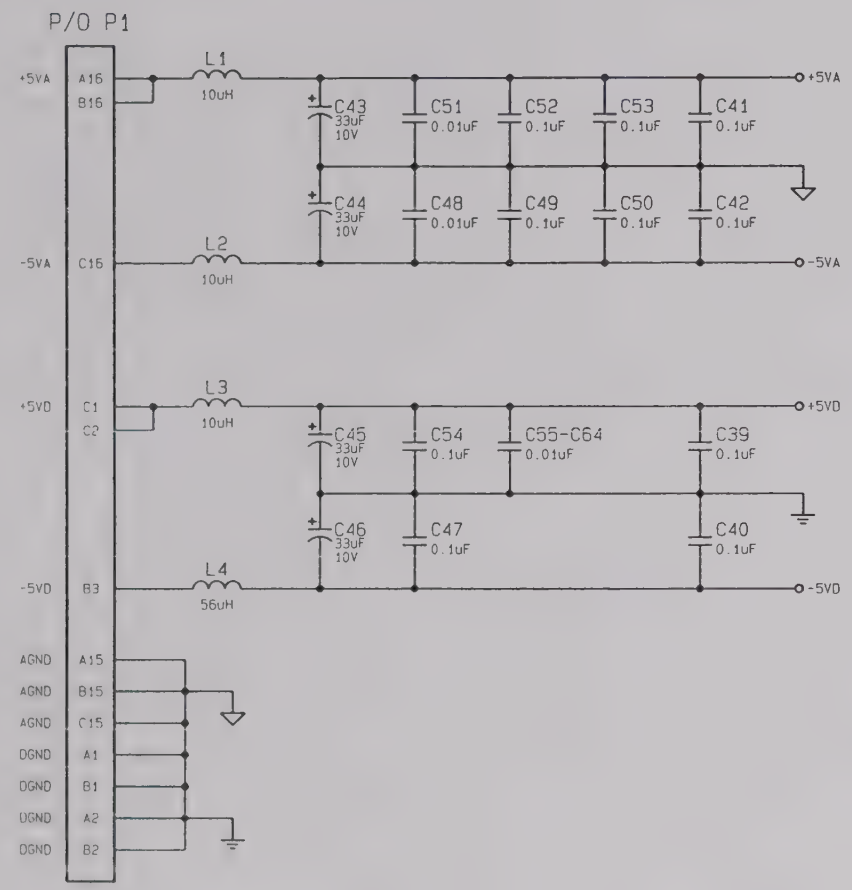

NOTES:

1. UNLESS OTHERWISE NOTED:
   A. RESISTANCE IS EXPRESSED IN OHMS, QW, 5%.
   B. CAPACITANCE IS EXPRESSED IN MICROFARADS

DEVICE	+5VD	-5VD	DGND	+5VA	-5VA	AGND
ADSP-2105	16, 26 57		2, 10 29, 49			
AD713				4	11	
AD1856	3	8	2	16	1	12
CS5336	18		19	4	5	1
YM3434	4, 8		13			
27C256	28		14			
5164S-10	28		14			
74AC08	14		7			
74AC14	14		7			
74AC109	16		8			
74AC245	20		10			
74AC373	20		10			

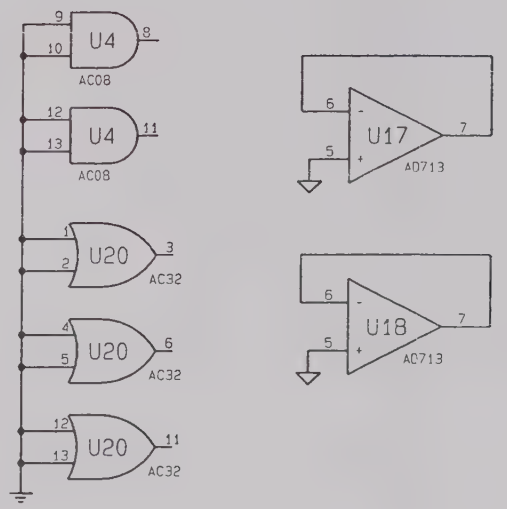

SIZE	CAGE NO	DWG NO	REV
B	41364	02-5743-10	4

SHEET 3 OF 3

REVISIONS			
REV.	DESCRIPTION	DATE	APPROVED

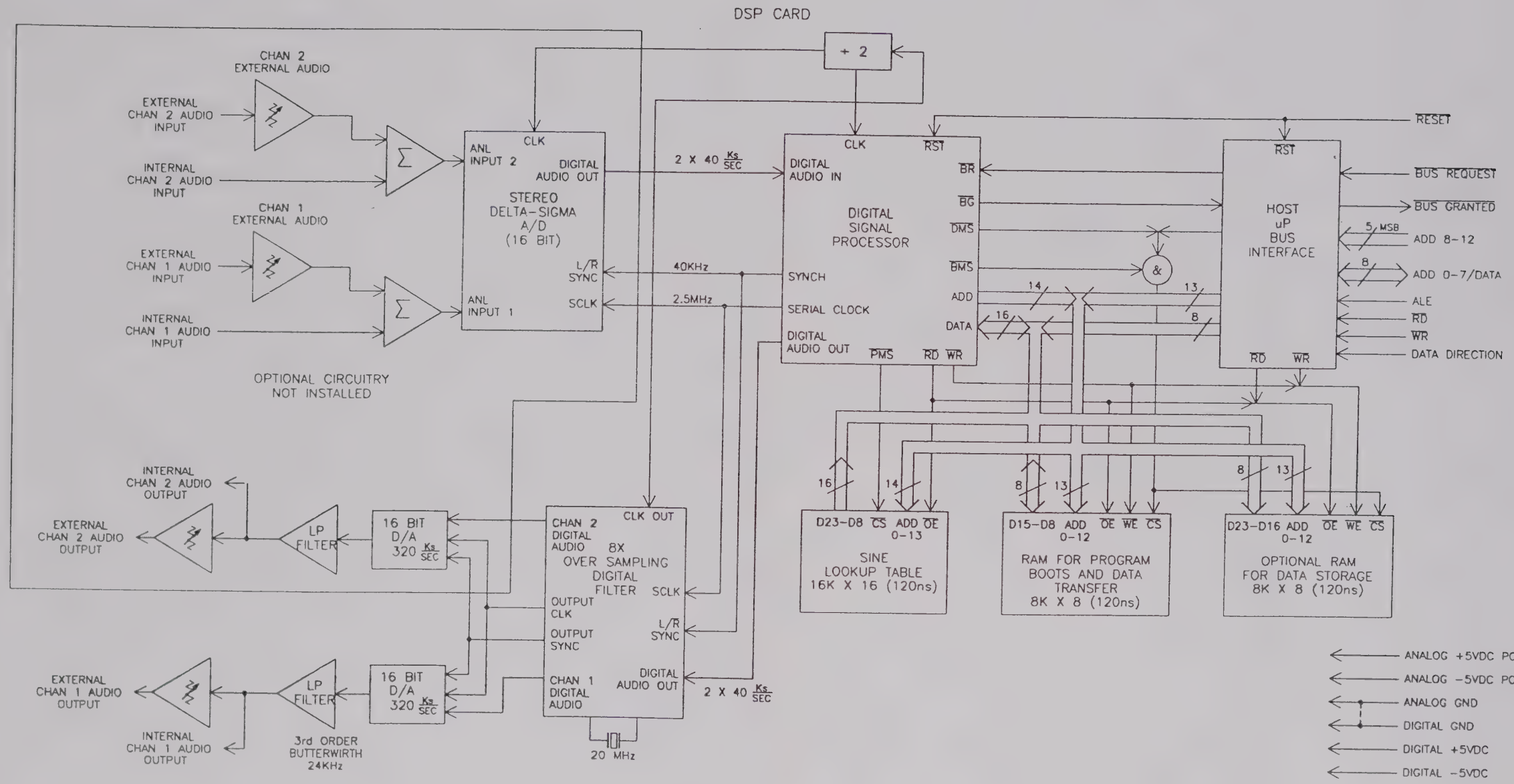

ITEM	QTY REQD	JcAIR PART NUMBER	PART DESCRIPTION	MANUFACTURER PART NO.

PARTS LIST

UNLESS OTHERWISE SPECIFIED DIMENSIONS ARE IN INCHES
TOLERANCES ARE:
FRACTIONS ± DECIMALS XX ± XXX ± ANGLES ±

CONTRACT NO.

JcAIR

400 INDUSTRIAL PKWY
INDUSTRIAL AIRPORT, KS 66031

APPROVALS	DATE
DRAWN B PAGE	10/25/91
CHECKED	
ISSUED	

MATERIAL

FINISH

DO NOT SCALE DRAWING

BLOCK DIAGRAM DSP CARD

NEXT ASSY	USED ON
	NAV 2000
APPLICATION	

SIZE	FSCM NO.	DWG. NO.	REV.
B		40-5743-00/10	0

SCALE N/A | NAV 2000 | SHEET 1 of 1

JcAIR INC.

NAME: KEYBOARD NAV 2000 W/RF ON/OFF "HOT" KEY ASSY NO: 20-5745-20

REVISION: 00 DATE: 07/24/1995

ITEM/ SYMBOL	JcAIR PART NO.	DESCRIPTION	U/M	QTY	MANUFACTURER	MANF'S P/N
1	09-5745-10	PCB KEYBOARD NAV 2000R	EA	1.00	QMC	09-5745-10
2	30-9106-02	LATCH EJECTION HEADER LONG .576	EA	2.00	AMP	102320-1
					DUPONT	65824-001
C1	CB-1475-01	CAP TN 4.7UF 10V 10%	EA	1.00	KEMET	T110A475K010AS
					MALLORY	TAC475K010P02
					MIL SPEC	M39003/01-2254
					SPRAGUE	150D475X9010A2
C2	CB-1104-05	CAP TN .1UF 35V 10%	EA	1.00	SPRAGUE	150D104X9035A2
C3	CB-0225-22	CAP TN 2.2UF 16V 20%	EA	1.00	KEMET	T353A225M016AS
C4	CE-0103-13	CAP DP .01UF 50V 10% X7R	EA	4.00	SPRAGUE	923CX7R103K050B
C5	CE-0103-13	CAP DP .01UF 50V 10% X7R	EA	-		
C6	CE-0103-13	CAP DP .01UF 50V 10% X7R	EA	-		
C7	CE-0103-13	CAP DP .01UF 50V 10% X7R	EA	-		
CR1	07-6016-00	DIODE SIL 1N4148 PKG=DO35	EA	5.00	MOTOROLA	1N4148
CR2	07-6016-00	DIODE SIL 1N4148 PKG=DO35	EA	-		
CR3	07-6016-00	DIODE SIL 1N4148 PKG=DO35	EA	-		
CR4	07-6016-00	DIODE SIL 1N4148 PKG=DO35	EA	-		
CR5	07-6016-00	DIODE SIL 1N4148 PKG=DO35	EA	-		
P1	30-2050-24	CONN HEADER EJECTION 24 PIN	EA	1.00	AMP	102154-5
P3	55-0520-51	CABLE KEYBOARD TO DISPLAY NAV 2000R	EA	1.00	JCAIR	55-0520-51
RN1	RH-4104-12	RES RN 100K X 5 BUSSED	EA	1.00	BOURNS	4606X-101-104
S1-S38	31-5037-53	SWITCH ENGRAVED KEY TEXT SET NAV2000R-80	EA	1.00	JCAIR	31-5037-53
U1	12-7532-00	IC 74C923 KEY BD ENCODER/DECODER	EA	1.00	NATIONAL	MM74C923N
U2	12-7603-00	IC 74HC30 8-INPUT NAND GATE	EA	1.00	MOTOROLA	MC74HC30
					NATIONAL	MM74HC30
					RCA	CD74HC30
REF1	25-5745-20	ASSY DWG KEYBOARD NAV 2000R	EA	-		
REF2	02-5745-20	SCHEMATIC KEYBOARD NAV 2000R	EA	-		

REVISIONS			
REV	DESCRIPTION	DATE	APPROVED

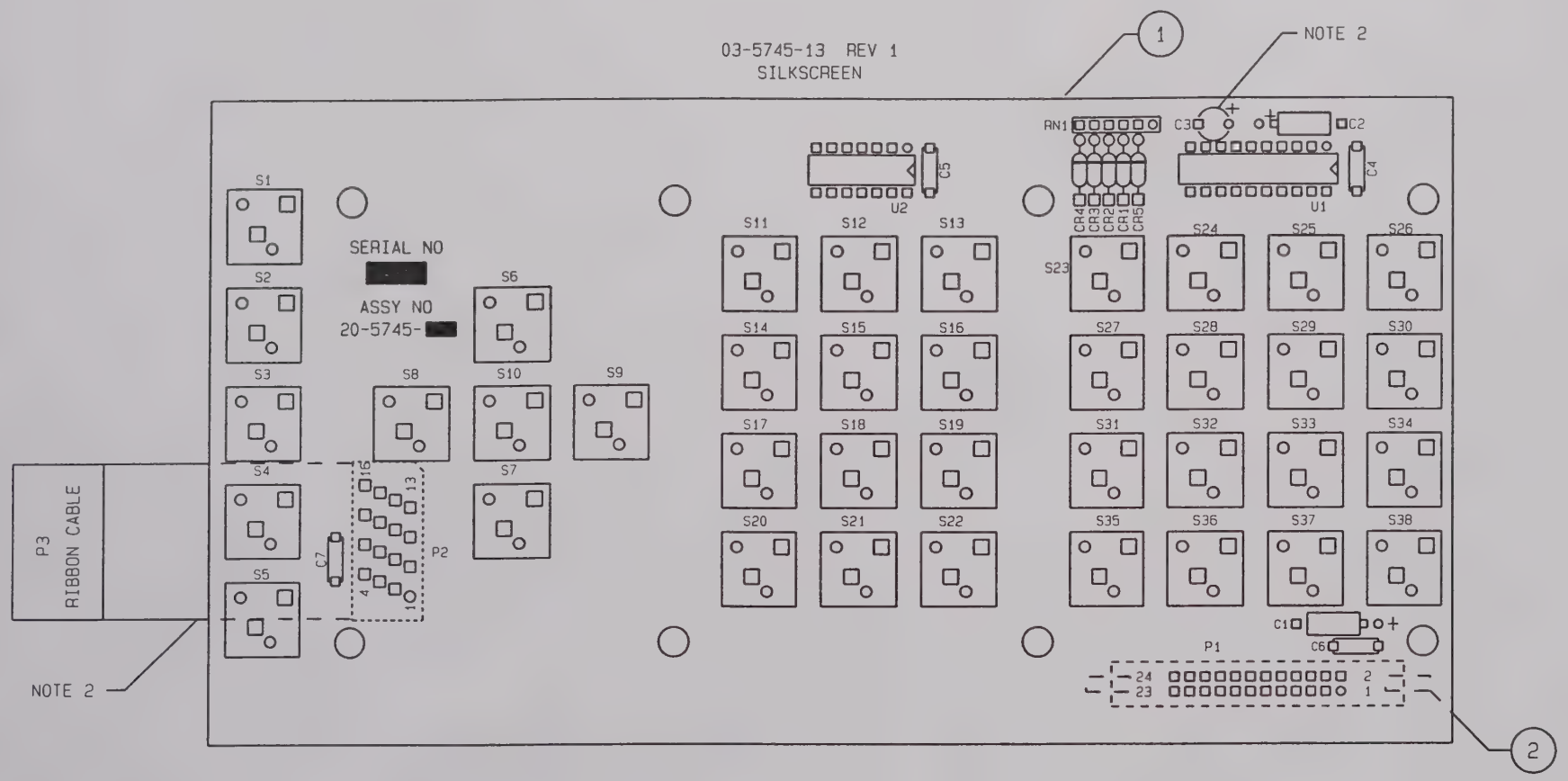

NOTES:

1. FOR COMPLETE ITEM DESCRIPTION REFERENCE BILL OF MATERIALS 20-5745-20.
2. INSTALL C3 AND P2-P3 RIBBON CABLE ON SOLDER SIDE OF BOARD.

	QTY REQD	FSCM NO.	PART OR IDENTIFYING NO.	NOMENCLATURE OR DESCRIPTION	MATERIAL SPECIFICATION

PARTS LIST

PROPRIETARY NOTICE

THIS DOCUMENT IS PROPRIETARY TO JcAIR INC. AND IS NOT TO BE REPRODUCED OR OTHERWISE DISSEMINATED WITHOUT THE WRITTEN PERMISSION OF JcAIR INC.

	NAV2000R
NEXT ASSY	USED ON
APPLICATION	

UNLESS OTHERWISE SPECIFIED DIMENSIONS ARE IN INCHES
TOLERANCES ARE:
FRACTIONS ± | DECIMALS .XX ± .XXX | ANGLES ±

MATERIAL

FINISH

DO NOT SCALE DRAWING

CONTRACT NO.

APPROVALS	DATE
DRAWN NRH	17JUL95
CHECKED	
ISSUED	

FILE: 25574520.PCB

JcAIR INC.
400 INDUSTRIAL PARKWAY
INDUSTRIAL AIRPORT, KS USA 66031

KEYBOARD

SIZE	FSCM NO.	DWG. NO.	REV.
B	41364	25-5745-20	0

SCALE 1:1 | UNIT: NAV2000R | SHEET 1 OF 1

DWG NO	SH	REV
02-5745-20	1	0

REVISIONS

REV	DESCRIPTION	DATE	APPROVED

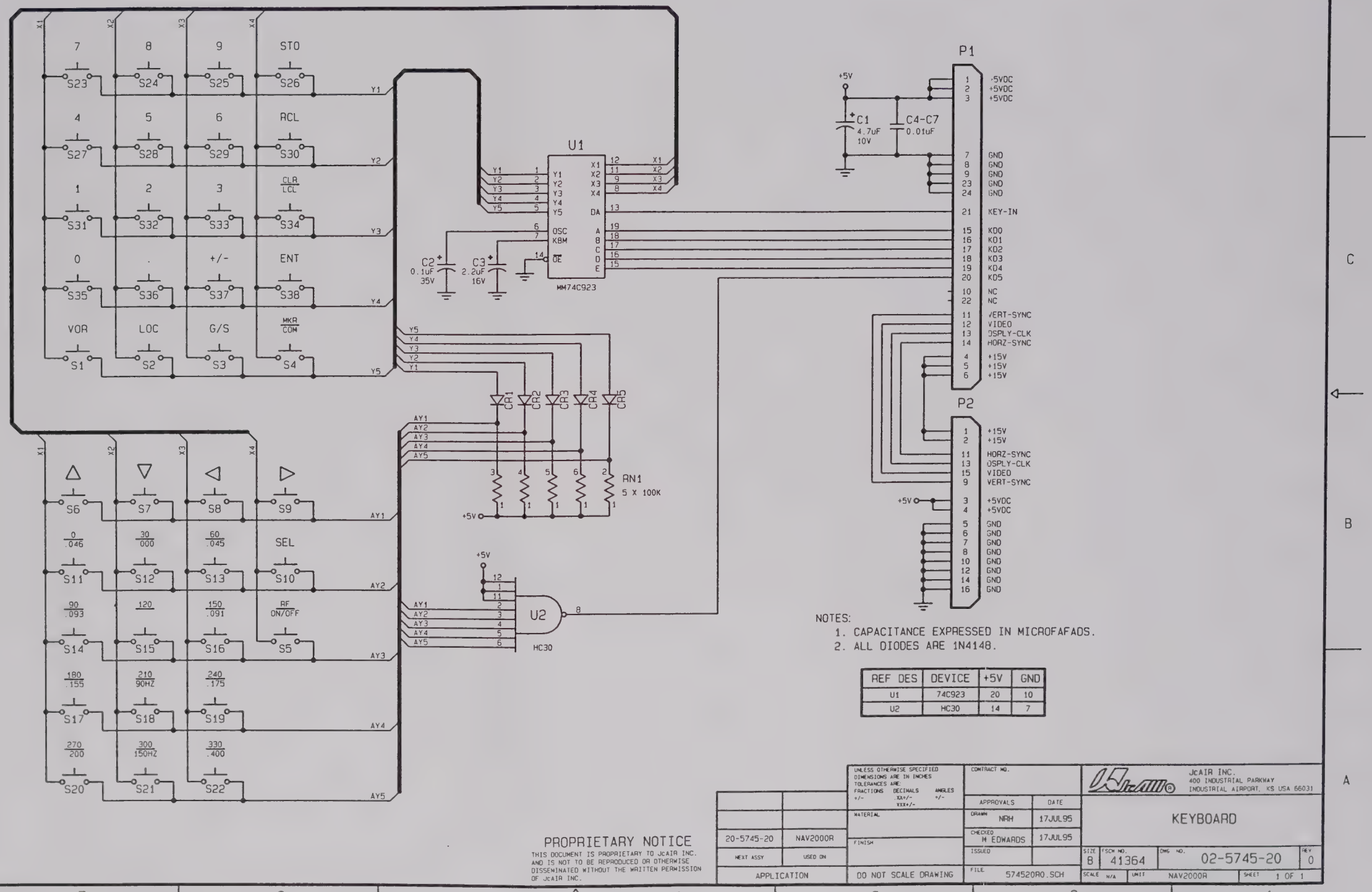

NOTES:
1. CAPACITANCE EXPRESSED IN MICROFAFADS.
2. ALL DIODES ARE 1N4148.

REF DES	DEVICE	+5V	GND
U1	74C923	20	10
U2	HC30	14	7

PROPRIETARY NOTICE

THIS DOCUMENT IS PROPRIETARY TO JCAIR INC. AND IS NOT TO BE REPRODUCED OR OTHERWISE DISSEMINATED WITHOUT THE WRITTEN PERMISSION OF JCAIR INC.

20-5745-20	NAV2000R
NEXT ASSY	USED ON
APPLICATION	

UNLESS OTHERWISE SPECIFIED DIMENSIONS ARE IN INCHES
TOLERANCES ARE:
FRACTIONS +/- DECIMALS .XX+/- .XXX+/- ANGLES +/-

MATERIAL

FINISH

DO NOT SCALE DRAWING

CONTRACT NO.

APPROVALS	DATE
DRAWN NRH	17JUL95
CHECKED M EDWARDS	17JUL95
ISSUED	

FILE 574520R0.SCH

JCAIR INC.
400 INDUSTRIAL PARKWAY
INDUSTRIAL AIRPORT, KS USA 66031

KEYBOARD

SIZE	FSCM NO.	DWG NO.	REV
B	41364	02-5745-20	0

SCALE N/A | UNIT NAV2000R | SHEET 1 OF 1

JcAIR INC.

NAME: AUDIO BD NAV 2000R -80 ASSY NO: 20-5761-30

REVISION: 00 DATE: 07/24/95

ITEM/ SYMBOL	JcAIR PART NO.	DESCRIPTION	U/M	QTY	MANUFACTURER	MANF'S P/N
1	09-5761-00	PCB AUDIO NAV 2000	EA	1.00		
2	89-2102-07	SCREW PHP #2-56 X .438	EA	2.00	MIL SPEC	MS51957-6
3	89-0902-00	WASHER LOCK #2	EA	2.00	MIL SPEC	MS35338-134
4	89-1102-00	NUT HEX #2 SM PAT	EA	2.00	NATIONAL AERO	NAS671C2
5	89-0102-00	WASHER FLAT #2 .150 OD (SML PAT)	EA	2.00	NATIONAL AERO	NAS620C2
6	89-9028-00	SCREW SELF-TAPPING FHP #2 TYPE F X .312L	EA	2.00	MIL SPEC	MS24629F-4
C1	CG-0680-12	CAP MC 68PF 200V 10% COG	EA	3.00	KEMET	C315C680K2G5CA
C2	CG-0104-13	CAP MC .1UF 50V 10% X7R	EA	2.00	CENTRALAB	CW20C104K
C3	CG-0104-13	CAP MC .1UF 50V 10% X7R	EA	-		
C4	CH-1105-00	CAP CK 1UF 50V 10%	EA	3.00	KEMET	C06K105K5X5CA
					MALLORY	CK06BX105K
C5	CG-0680-12	CAP MC 68PF 200V 10% COG	EA	-		
C6	CG-0101-12	CAP MC 100PF 200V 10% COG	EA	3.00	KEMET	C315C101K2G5CA
C7	CG-0101-12	CAP MC 100PF 200V 10% COG	EA	-		
C9	CH-0103-00	CAP CK .01UF 50V 10%	EA	17.00	MALLORY	CK05BX103K
C10	CH-0103-00	CAP CK .01UF 50V 10%	EA	-		
C11	CH-0104-00	CAP CK .1UF 50V 10%	EA	12.00	KEMET	C052K104K5X5CA
					MALLORY	CK05BX104K
					MIL SPEC	M39014/01-1553V
					SPRAGUE	CK05BX104K
C12	CB-1336-01	CAP TN 33UF 10V 10%	EA	5.00	KEMET	T110B336K010AS
					MIL SPEC	M39003/01-2257
C13	CB-1336-01	CAP TN 33UF 10V 10%	EA	-		
C14	CH-0103-00	CAP CK .01UF 50V 10%	EA	-		
C15	CB-1105-05	CAP TN 1UF 35V 10%	EA	2.00	KEMET	T110A105K035AS
					SPRAGUE	150D105X9035A2
C16	CG-0103-13	CAP MC .01UF 50V 10% X7R	EA	1.00	CENTRALAB	CW15C103K
C17	CH-0104-00	CAP CK .1UF 50V 10%	EA	-		
C18	CG-0470-02	CAP MC 47PF 200V 5% COG	EA	1.00	KEMET	C315C470J2G5CA
C19	CH-0104-00	CAP CK .1UF 50V 10%	EA	-		
C20	CH-0104-00	CAP CK .1UF 50V 10%	EA	-		
C21	CG-0331-11	CAP MC 330PF 100V 10% COG	EA	2.00	KEMET	C315C331K1G5CA
C22	CG-0101-12	CAP MC 100PF 200V 10% COG	EA	-		
C23	CB-1105-05	CAP TN 1UF 35V 10%	EA	-		
C24	CH-0104-00	CAP CK .1UF 50V 10%	EA	-		
C25	CG-0220-12	CAP MC 22PF 200V 10% COG	EA	1.00	KEMET	C315C220K2G5CA
C26	CB-1336-01	CAP TN 33UF 10V 10%	EA	-		
C27	CB-1226-05	CAP TN 22UF 35V 10%	EA	2.00	MIL SPEC	M39003/01-2306
					SPRAGUE	150D226X9035R2
C28	CB-1336-01	CAP TN 33UF 10V 10%	EA	-		
C29	CB-1336-01	CAP TN 33UF 10V 10%	EA	-		
C30	CB-1226-05	CAP TN 22UF 35V 10%	EA	-		
C31	CH-0103-00	CAP CK .01UF 50V 10%	EA	-		
C32	CH-0103-00	CAP CK .01UF 50V 10%	EA	-		
C33	CH-0103-00	CAP CK .01UF 50V 10%	EA	-		
C34	CH-0103-00	CAP CK .01UF 50V 10%	EA	-		
C35	CH-0103-00	CAP CK .01UF 50V 10%	EA	-		
C36	CH-0103-00	CAP CK .01UF 50V 10%	EA	-		

NAME: AUDIO BD NAV 2000R -80 ASSY NO: 20-5761-30

REVISION: 00 DATE: 07/24/95

ITEM/ SYMBOL	JcAIR PART NO.	DESCRIPTION	U/M	QTY	MANUFACTURER	MANF'S P/N
C37	CH-0103-00	CAP CK .01UF 50V 10%	EA	-		
C38	CH-0103-00	CAP CK .01UF 50V 10%	EA	-		
C39	CH-0103-00	CAP CK .01UF 50V 10%	EA	-		
C40	CH-0103-00	CAP CK .01UF 50V 10%	EA	-		
C41	CH-0103-00	CAP CK .01UF 50V 10%	EA	-		
C42	CH-0104-00	CAP CK .1UF 50V 10%	EA	-		
C43	CH-0104-00	CAP CK .1UF 50V 10%	EA	-		
C44	CH-0103-00	CAP CK .01UF 50V 10%	EA	-		
C45	CH-0104-00	CAP CK .1UF 50V 10%	EA	-		
C46	CH-0101-20	CAP CK 100PF 200V 10%	EA	1.00	SPRAGUE	CK05BX101K
C47	CH-0103-00	CAP CK .01UF 50V 10%	EA	-		
C48	CH-0104-00	CAP CK .1UF 50V 10%	EA	-		
C50	CH-0103-00	CAP CK .01UF 50V 10%	EA	-		
C51	CG-0680-12	CAP MC 68PF 200V 10% COG	EA	-		
C52	CH-0104-00	CAP CK .1UF 50V 10%	EA	-		
C53	CH-0104-00	CAP CK .1UF 50V 10%	EA	-		
C54	CH-0104-00	CAP CK .1UF 50V 10%	EA	-		
C55	CG-0331-11	CAP MC 330PF 100V 10% COG	EA	-		
C56	CH-1105-00	CAP CK 1UF 50V 10%	EA	-		
C57	CH-1105-00	CAP CK 1UF 50V 10%	EA	-		
CR1	07-6058-01	DIODE REC 1N4002 PKG=DO41	EA	9.00	MOTOROLA	1N4002
CR2	07-6058-01	DIODE REC 1N4002 PKG=DO41	EA	-		
CR3	07-6058-01	DIODE REC 1N4002 PKG=DO41	EA	-		
CR4	07-6058-01	DIODE REC 1N4002 PKG=DO41	EA	-		
CR5	07-6058-01	DIODE REC 1N4002 PKG=DO41	EA	-		
CR6	07-6058-01	DIODE REC 1N4002 PKG=DO41	EA	-		
CR7	07-6058-01	DIODE REC 1N4002 PKG=DO41	EA	-		
CR8	07-6058-01	DIODE REC 1N4002 PKG=DO41	EA	-		
CR9	07-6021-00	DIODE 1N5711	EA	3.00	HP	1N5711
CR10	07-6021-00	DIODE 1N5711	EA	-		
CR11	07-6058-01	DIODE REC 1N4002 PKG=DO41	EA	-		
CR12	07-6021-00	DIODE 1N5711	EA	-		
J1	30-5245-48	CONN CARD EDGE TRPL PLUG RT ANG 48 POS	EA	1.00	TRW	009-00010-4
					TRW	43-1482
J2	30-1985-20	CONN HOUSING RCPT DBL ROW 20 POS PC MNT	EA	1.00	AMP	1-534206-0
J3	30-0039-00	CONN BNC RCPT RT ANG PC MNT	EA	1.00	AMP	226990-1
L1	19-2153-03	INDUCTOR MOLDED 10UH .44A .605 OHM 10%	EA	5.00	DALE	IM-6 10UH 10%
					MIL SPEC	MS75101-7
L2	19-2153-03	INDUCTOR MOLDED 10UH .44A .605 OHM 10%	EA	-		
L3	19-2153-03	INDUCTOR MOLDED 10UH .44A .605 OHM 10%	EA	-		
L4	19-2153-03	INDUCTOR MOLDED 10UH .44A .605 OHM 10%	EA	-		
L5	19-2153-03	INDUCTOR MOLDED 10UH .44A .605 OHM 10%	EA	-		
Q1	07-0159-00	XSTR NPN 2N3904 PKG=TO92	EA	2.00	GE	2N3904
					MOTOROLA	2N3904

NAME: AUDIO BD NAV 2000R -80 ASSY NO: 20-5761-30

REVISION: 00 DATE: 07/24/95

ITEM/ SYMBOL	JcAIR PART NO.	DESCRIPTION	U/M	QTY	MANUFACTURER	MANF'S P/N
Q2	07-0159-00	XSTR NPN 2N3904 PKG=TO92	EA	-		
Q3	07-0195-00	XSTR PNP MJE700 PKG=TO225AA TMP=O	EA	1.00	MOTOROLA	MJE700
					THOMPSON	SK3997
R1	RC-4421-12	RES MF 4.42K EW 1%	EA	1.00	DALE	CMF-55 4421FT-1
					MIL SPEC	RN-55D 4421F
R2	RC-4991-12	RES MF 4.99K EW 1%	EA	5.00	DALE	CMF-55 4991FT-1
					MIL SPEC	RN-55D 4991F
R3	RB-0221-23	RES CF 220 QW 5%	EA	1.00	NIC	NCF25-220-B
R4	RB-0472-23	RES CF 4.7K QW 5%	EA	6.00	NIC	NCF25-4.7K-B
R5	RB-0122-23	RES CF 1.2K QW 5%	EA	1.00	NIC	NCF25-1.2K-B
R8	RJ-0052-12	RES VR 1K 15T 10%	EA	1.00	ALLEN-BRADLEY	94P102
					BOURNS	3006P-1-102
R9	RB-0471-23	RES CF 470 QW 5%	EA	2.00	NIC	NCF25-470-B
R10	RJ-0052-15	RES VR 5K 15T 10%	EA	2.00	ALLEN-BRADLEY	94P502
					BOURNS	3006P-1-502
R11	RC-7501-12	RES MF 7.5K EW 1%	EA	3.00	DALE	CMF-55 7501FT-1
					MIL SPEC	RN-55D 7501F
R12	RC-1002-12	RES MF 10K EW 1%	EA	5.00	DALE	CMF-55 1002FT-1
					MIL SPEC	RN-55D 1002F
R13	RC-1002-12	RES MF 10K EW 1%	EA	-		
R14	RC-4991-12	RES MF 4.99K EW 1%	EA	-		
R16	RC-2001-12	RES MF 2K EW 1%	EA	7.00	DALE	CMF-55 2001FT-1
					MIL SPEC	RN-55D 2001F
R17	RC-4991-12	RES MF 4.99K EW 1%	EA	-		
R18	RC-1002-12	RES MF 10K EW 1%	EA	-		
R19	RC-0511-15	RES MF 51.1 EW .1%	EA	1.00	MIL SPEC	RN-55E 51R1B
R20	RC-1501-15	RES MF 1.5K EW .1%	EA	1.00	MIL SPEC	RN-55E 1501B
R21	RC-6041-15	RES MF 6.04K EW .1% (+/-25 PPM)	EA	1.00	MIL SPEC	RN-55E 6041B
R22	RC-4993-12	RES MF 499K EW 1%	EA	4.00	MIL SPEC	RN-55D 4993F
R23	RB-0472-23	RES CF 4.7K QW 5%	EA	-		
R24	RC-4993-12	RES MF 499K EW 1%	EA	-		
R25	RB-0472-23	RES CF 4.7K QW 5%	EA	-		
R26	RC-4992-12	RES MF 49.9K EW 1%	EA	2.00	DALE	CMF-55 4992FT-1
					MIL SPEC	RN-55D 4992F
R27	RC-4992-12	RES MF 49.9K EW 1%	EA	-		
R28	RB-0224-23	RES CF 220K QW 5%	EA	3.00	NIC	NCF25-220K-B
R29	RB-0222-23	RES CF 2.2K QW 5%	EA	1.00	NIC	NCF25-2.2K-B
R30	RB-0472-23	RES CF 4.7K QW 5%	EA	-		
R31	RB-0102-23	RES CF 1K QW 5%	EA	1.00	NIC	NCF25-1K-B
R32	RB-0390-33	RES CF 39 HW 5%	EA	1.00	BEC	B50J 39
R33	RB-0680-23	RES CF 68 QW 5%	EA	8.00	NIC	NCF25-68-B
R34	RB-0680-23	RES CF 68 QW 5%	EA	-		
R35	RB-0680-23	RES CF 68 QW 5%	EA	-		
R36	RB-0680-23	RES CF 68 QW 5%	EA	-		
R37	RB-0680-23	RES CF 68 QW 5%	EA	-		
R38	RB-0680-23	RES CF 68 QW 5%	EA	-		
R39	RB-0680-23	RES CF 68 QW 5%	EA	-		
R40	RB-0680-23	RES CF 68 QW 5%	EA	-		

NAME: AUDIO BD NAV 2000R -80 ASSY NO: 20-5761-30

REVISION: 00 DATE: 07/24/95

ITEM/ SYMBOL	JcAIR PART NO.	DESCRIPTION	U/M	QTY	MANUFACTURER	MANF'S P/N
R41	RC-2001-12	RES MF 2K EW 1%	EA	-		
R42	RJ-0052-11	RES VR POT 500 15T 10%	EA	1.00	ALLEN-BRADLEY	94P501
					BOURNS	3006P-1-501
R43	RC-3160-12	RES MF 316 EW 1%	EA	1.00	DALE	CMF-55 3160FT-1
					MIL SPEC	RN-55D 3160F
R44	RC-7501-12	RES MF 7.5K EW 1%	EA	-		
R45	RC-1501-12	RES MF 1.50K EW 1%	EA	1.00	DALE	CMF-55 1501FT-1
					MIL SPEC	RN-55D 1501F
R46	RJ-0052-15	RES VR 5K 15T 10%	EA	-		
R47	RC-4991-12	RES MF 4.99K EW 1%	EA	-		
R48	RC-7501-12	RES MF 7.5K EW 1%	EA	-		
R49	RC-2001-12	RES MF 2K EW 1%	EA	-		
R50	RC-2001-12	RES MF 2K EW 1%	EA	-		
R51	RC-1052-12	RES MF 10.5K EW 1%	EA	1.00	DALE	CMF-55 1052FT-1
					MIL SPEC	RN-55D 1052F
R52	RC-5490-12	RES MF 549 EW 1%	EA	1.00	DALE	CMF-55 5490FT-1
					MIL SPEC	RN-55D 5490F
R53	RC-8250-12	RES MF 825 EW 1%	EA	1.00	MIL SPEC	RN-55D 8250F
R54	RC-4993-12	RES MF 499K EW 1%	EA	-		
R55	RC-4993-12	RES MF 499K EW 1%	EA	-		
R56	RB-0472-23	RES CF 4.7K QW 5%	EA	-		
R57	RB-0472-23	RES CF 4.7K QW 5%	EA	-		
R58	RB-0224-23	RES CF 220K QW 5%	EA	-		
R59	RB-0224-23	RES CF 220K QW 5%	EA	-		
R60	RB-0471-23	RES CF 470 QW 5%	EA	-		
R61	RB-0101-23	RES CF 100 QW 5%	EA	1.00	NIC	NCF25-100-B
R62	RC-1002-12	RES MF 10K EW 1%	EA	-		
R63	RC-1002-12	RES MF 10K EW 1%	EA	-		
R64	RC-4991-12	RES MF 4.99K EW 1%	EA	-		
R65	RC-2001-12	RES MF 2K EW 1%	EA	-		
R66	RC-2001-12	RES MF 2K EW 1%	EA	-		
R67	RC-2001-12	RES MF 2K EW 1%	EA	-		
RN1	RH-4103-16	RES RN 10K X 9 BUSSED	EA	2.00	BOURNS	4610X-101-103
					DALE	CSC10A-01-103G
					PANASONIC	EXB-R89103K
RN2	RH-4103-16	RES RN 10K X 9 BUSSED	EA	-		
U1	12-8050-00	IC 74AC245 TRANSCEIVER PKG=P20 TMP=M	EA	1.00	RCA	CD74AC245E
U2	12-8044-00	IC 74AC541 BUFFER/DRIVER PKG=P20 TMP=M	EA	1.00	RCA	CD74AC541E
U3	12-8042-00	IC 74AC138 DECDR/DEMLTPLXR PKG=P16 TMP=M	EA	1.00	RCA	CD74AC138E
U4	12-8041-00	IC 74AC14 SCHMITT TRIGGER PKG=P14 TMP=M	EA	1.00	RCA	CD74AC14E
U5	12-7751-00	IC 74AC32 QUAD OR GATE PKG=P14 TMP=I	EA	1.00	RCA	CD74AC32E
U6	12-8038-00	IC 74AC08 QUAD AND GATE PKG=P14 TMP=M	EA	1.00	RCA	CD74AC08E
U7	12-8049-00	IC 1230 D/A CONVERTER PKG=C20 TMP=I	EA	2.00	NATIONAL	DAC1230LCJ
U8	12-8049-00	IC 1230 D/A CONVERTER PKG=C20 TMP=I	EA	-		
U9	12-7911-00	IC 713 BIFET OP AMP PKG=P14 TMP=C	EA	2.00	ANALOG DEVICES	AD713JN
U10	12-7918-00	IC 5815 PARALL/PARALL DRVR PKG=P22 TMP=I	EA	1.00	SPRAGUE	UCN5815A

JcAIR INC.

NAME: AUDIO BD NAV 2000R -80

ASSY NO: 20-5761-30

REVISION: 00

DATE: 07/24/95

ITEM/ SYMBOL	JcAIR PART NO.	DESCRIPTION	U/M	QTY	MANUFACTURER	MANF'S P/N
U11	12-7716-00	IC 74HC377 OCTAL D F/F W/CLOCK ENABLE	EA	1.00	RCA	CD74HC377E
					SIGNETICS	74HC377N
					TI	SN74HC377N
U12	12-7846-00	IC 712 DUAL BIFET OP AMP PKG=P08 TMP=C	EA	1.00	ANALOG DEVICES	AD712JN
U13	12-7179-03	IC 339A VOLTAGE COMPARATOR PKG=P14 TMP=C	EA	1.00	NATIONAL	LM339AN
U14	12-7570-00	IC 74HC123 MULTIVIBRATOR PKG=P16 TMP=I	EA	2.00	MOTOROLA	MC74HC123AP
					NATIONAL	MM74HC123AN
					RCA	CD74HC123E
					SIGNETICS	74HC123N
					TOSHIBA	TC74HC123P
U15	12-7805-00	IC REF02 VOLT REF PKG=P085 TMP=C V=5	EA	1.00	PMI	REF02CP
U16	12-7722-00	IC 201A QUAD ANALOG SWITCH PKG=P16 TMP=C	EA	1.00	ANALOG DEVICES	ADG201A
					INTERSIL	DG201ACJ
					MAXIM	DG201ACJ
					SILICONIX	GD201A
U17	12-7570-00	IC 74HC123 MULTIVIBRATOR PKG=P16 TMP=I	EA	-		
U18	12-7911-00	IC 713 BIFET OP AMP PKG=P14 TMP=C	EA	-		
REF1	02-5761-30	SCHEMATIC AUDIO BD NAV 2000R -80	EA	-		
REF2	25-5761-30	ASSY DWG AUDIO BD NAV 2000R -80	EA	-		

REV	DESCRIPTION		
1	ADDED NOTE 2		

03-5761-05 REV 1
SILKSCREEN

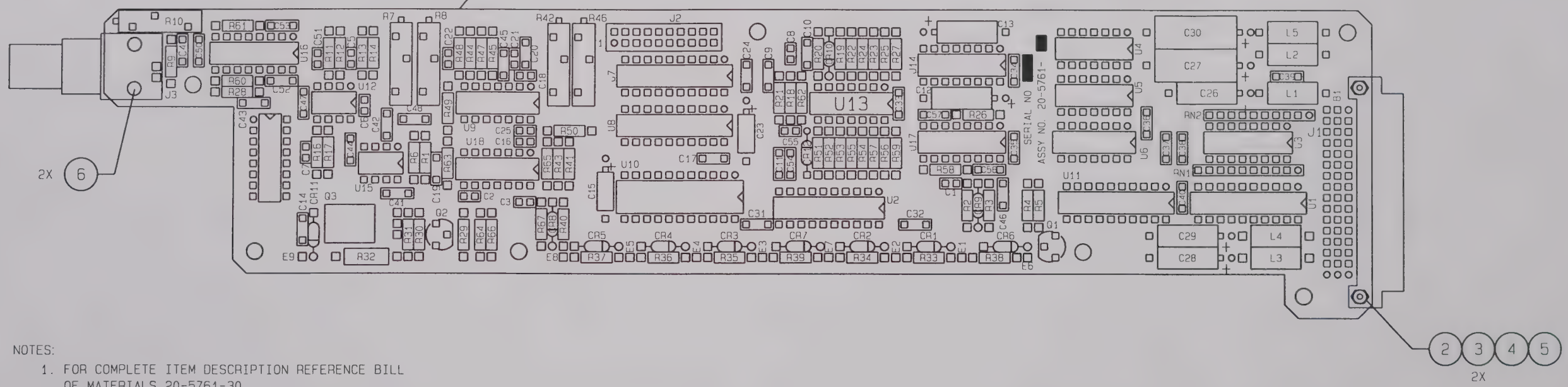

NOTES:

1. FOR COMPLETE ITEM DESCRIPTION REFERENCE BILL OF MATERIALS 20-5761-30.
2. JUMPER FROM U11-15 TO J2-4 ON SOLDER SIDE.
3. ADD JUMPERS:
   FROM E1 TO J1-B14
   FROM E2 TO J1-C14
   FROM E3 TO J1-B13
   FROM E4 TO J1-C13
   FROM E5 TO J1-A12
   FROM E6 TO J1-B12
   FROM E7 TO J1-C12
   FROM E8 TO J1-A11

20-5761-30	NAV 2000R
NEXT ASS'Y	USED ON
UNIT	NAV 2000R

DIMENSIONS ARE IN INCHES
TOLERANCES ARE:
DECIMALS: XX ± 01, XXX ± 005 | FRACTIONS: ± 1/64 | ANGLES: ±1/2 DEG

MATERIAL: FR4 .062 THK 1 OZ CU

FINISH: NA

BFGOODRICH AEROSPACE PROPRIETARY INFORMATION

APPROVALS	DATE
DRAWN NEIR	07/95
CHECKED	
ISSUED	

FILE NAME: 25576130 PCB

BFGoodrich Aerospace
JcAIR Test Systems
400 NEW CENTURY PARKWAY
NEW CENTURY, KS 66031-0009 USA
PHONE (913) 764-2452
FAX (913) 782-5104

ASSEMBLY
AUDIO BOARD

SIZE	CAGE NO	DWG NO	REV
B	41364	25-5761-30	1

SHEET 1 OF 1

DWG NO 02-5761-30 SH 1 REV 0

REVISIONS

REV	DESCRIPTION	DATE	APPROVED

P/O J1

DATA BUSS

+5VD

RN1 10K

RN2 10K

U1 AC245

U2 AC541

U11 HC377

U3 AC138

U4 AC14

U5 AC32

U12 AD712

U13 LM339A

U14 HC123

U15 REF-02

U16 HI-201

Q1 2N3904

CR9 1N5711

CR10 1N5711

DT/R A10
A/D0 C10
A/D1 A9
A/D2 B9
A/D3 C9
A/D4 A8
A/D5 B8
A/D6 C8
A/D7 A7

RD C5
WR B5
A8 B7
A9 C7
A10 A6
A11 B6
A12 C6
BUS REQ 4 A3

MOD AUDIO 2 A13
MOD AUDIO 1 A14

SH3-B4 DAUDIO-H
SH3-B4 DAUDIO-L
SH1-A8 AC/DC
SH1-A6 EXT-ON/OFF
SH3-A8 RELAY-CNTL
SH2-D8 WR
SH2-C8 Y0
SH2-C8 Y1
SH2-B6 FLMSB
SH2-B6 FLLSB
SH2-D8 Y4

P/O J2
20 TO HIGH RF
19 TO LOW RF
4 DET_SEL

P/O J1
C11 BUS GRANTED

U7-VREF SH2-D8

INTERNAL AUDIO LEVEL ADJUST

EXTERNAL MODULATION

AC/DC SH1-C4

SH1-C4 EXT-ON/OFF

+15V

+VREF

R1 4.42K
R2 4.99K
R3 220 OW, 5%
R4 4.7K
R5 1.2K
R8 1K
R9 470 OW, 5%
R10 5K
R11 7.5K
R12 10.0K
R13 10.0K
R14 4.99K
R16 2.00K
R17 4.99K
R18 10.0K
R19 51.1 EW, .1%
R20 1.50K EW, .1%
R21 6.04K EW, .1%
R22 499K
R23 4.7K OW, 5%
R24 499K
R25 4.7K OW, 5%
R26 49.9K
R27 49.9K
R28 220K OW, 5%

C1 68pF
C4 1.0uF
C5 68pF
C6 100pF
C7 100pF
C9 0.01uF
C10 0.01uF
C11 0.1uF
C12 33uF 10V
C13 33uF 10V
C46 100pF
C51 68pF

J3

PROPRIETARY NOTICE

THIS DOCUMENT IS PROPRIETARY TO JCAIR INC. AND IS NOT TO BE REPRODUCED OR OTHERWISE DISSEMINATED WITHOUT THE WRITTEN PERMISSION OF JCAIR INC.

20-5761-30	NAV2000R
NEXT ASSY	USED ON
APPLICATION	

UNLESS OTHERWISE SPECIFIED DIMENSIONS ARE IN INCHES TOLERANCES ARE: FRACTIONS ±/- DECIMALS .XX±/- .XXX±/- ANGLES ±/-

MATERIAL

FINISH

DO NOT SCALE DRAWING

CONTRACT NO.

APPROVALS	DATE
DRAWN NRH	17JUL95
CHECKED	
ISSUED	

FILE 576130S1.SCH

JCAIR INC.
400 INDUSTRIAL PARKWAY
INDUSTRIAL AIRPORT, KS USA 66031

AUDIO BOARD

SIZE	FSCM NO	DWG. NO.	REV
B	41364	02-5761-30	0

SCALE N/A UNIT NAV2000R SHEET 1 OF 3

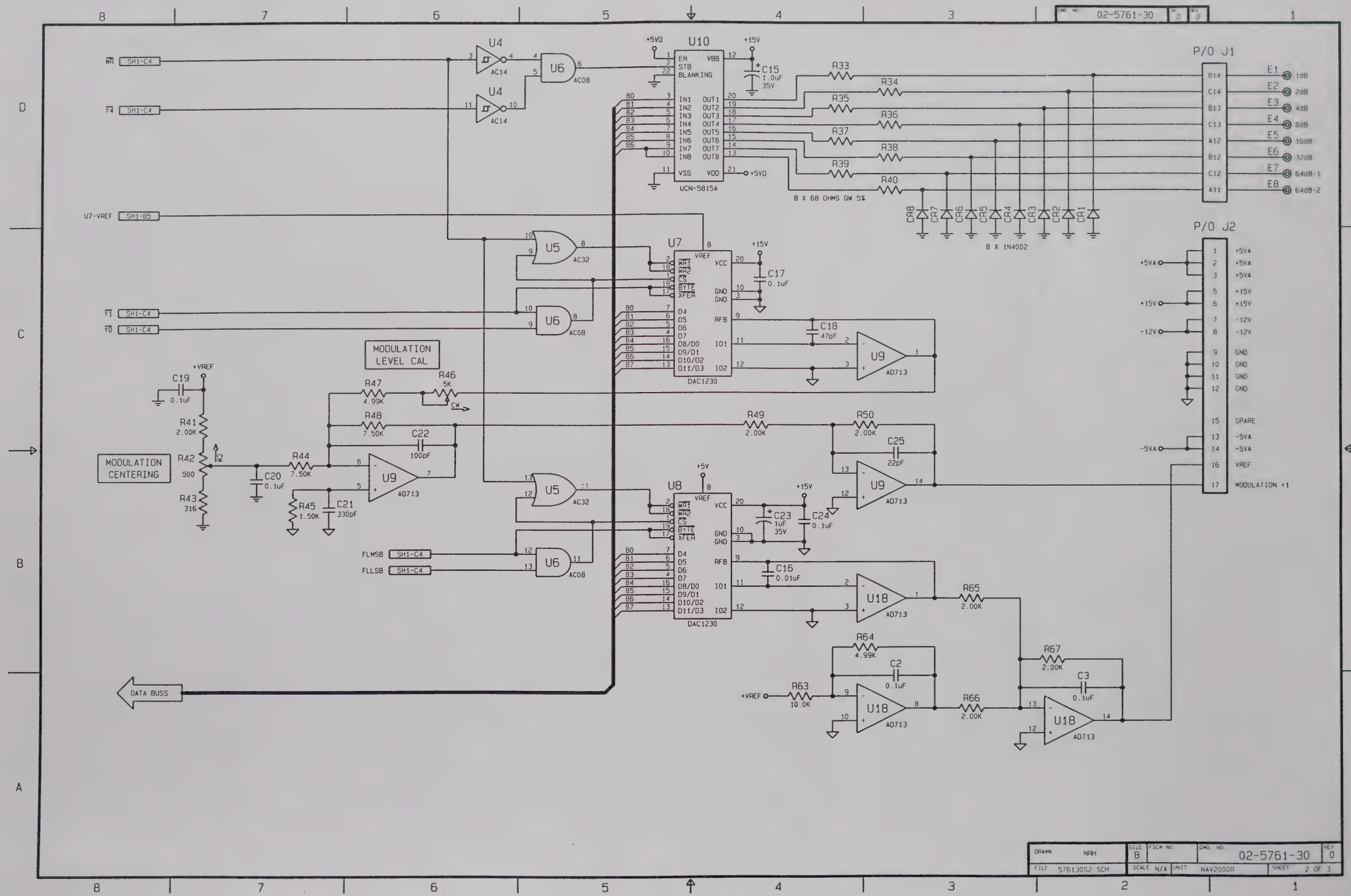

02-5761-30
U4
AC14
U6
AC08
U10
UCN-5815A
+5VD
+15V
C15
1.0uF
35V
R33
R34
R35
R36
R37
R38
R39
R40
8 X 68 OHMS QW 5%
CR8
CR7
CR6
CR5
CR4
CR3
CR2
CR1
8 X 1N4002
P/O J1
E1 1dB
E2 2dB
E3 4dB
E4 8dB
E5 16dB
E6 32dB
E7 64dB-1
E8 64dB-2
P/O J2
+5VA
+15V
-12V
GND
SPARE
-5VA
VREF
MODULATION +1
U7-VREF
SH1-B5
U5
AC32
U7
DAC1230
C17
0.1uF
C18
47pF
U9
AD713
MODULATION LEVEL CAL
MODULATION CENTERING
+VREF
C19
0.1uF
R41
2.00K
R42
500
R43
316
C20
0.1uF
R44
7.50K
R45
1.50K
C21
330pF
R47
4.99K
R46
5K
R48
7.50K
C22
100pF
R49
2.00K
R50
2.00K
C25
22pF
U8
DAC1230
C23
1uF
35V
C24
0.1uF
C16
0.01uF
U18
AD713
R65
2.00K
R64
4.99K
C2
0.1uF
R63
10.0K
R66
2.00K
R67
2.00K
C3
0.1uF
FLMSB
FLLSB
DATA BUSS
DRAWN NRH
SIZE B
FSCM NO.
DWG. NO. 02-5761-30
REV 0
FILE 576130S2 SCH
SCALE N/A
UNIT NAV2000R
SHEET 2 OF 3

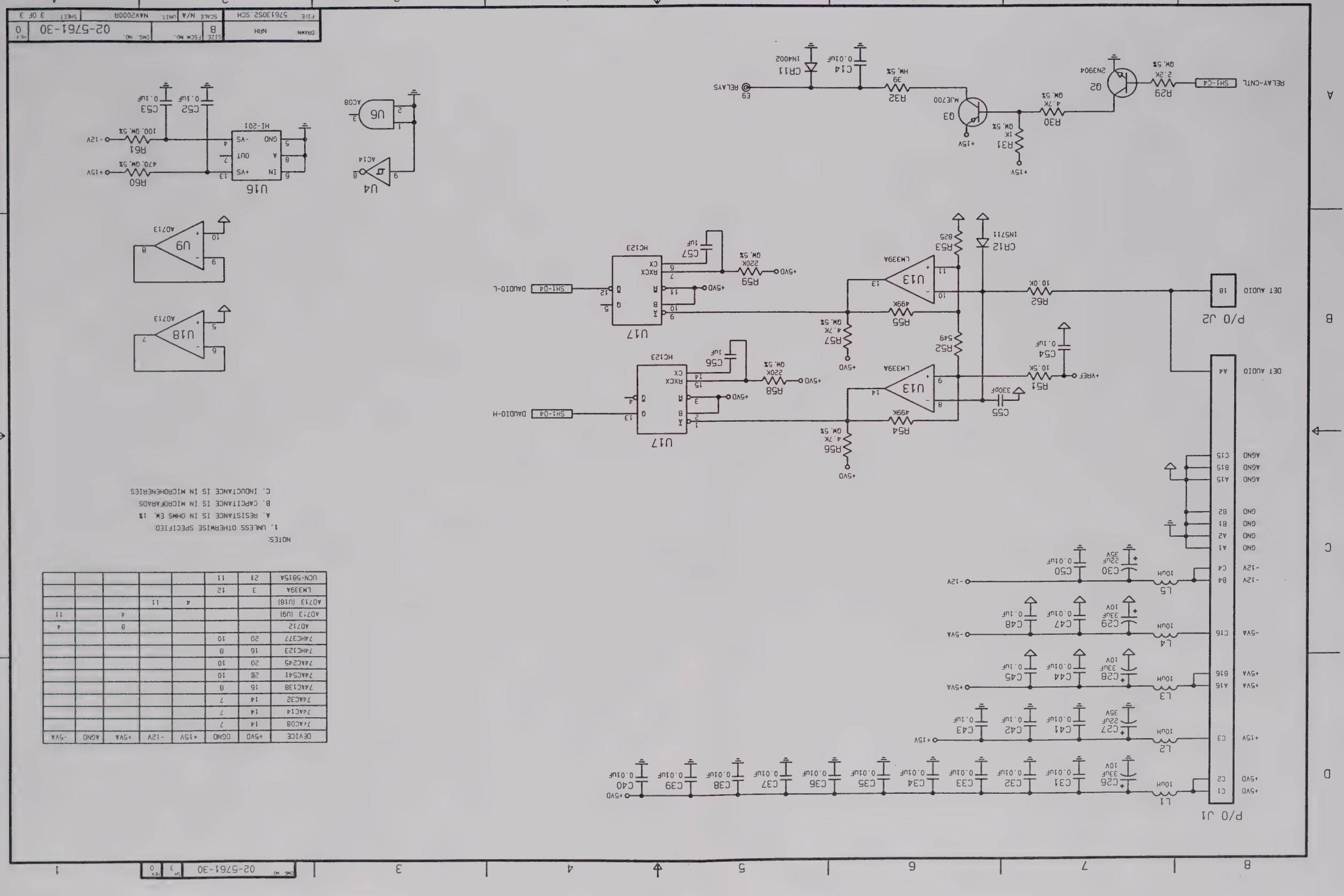

NOTES:

1. UNLESS OTHERWISE SPECIFIED:
   A. RESISTANCE IS IN OHMS EM. 1%
   B. CAPCITANCE IS IN MICROFARADS
   C. INDUCTANCE IS IN MICROHENERIES

DEVICE	+5VD	DGND	+15V	-12V	+5VA	AGND	-5VA
74ACO8	14	7					
74AC14	14	7					
74AC32	14	7					
74AC138	16	8					
74AC541	20	10					
74AC245	20	10					
74HC123	16	8					
74HC377	20	10					
AD712					8		4
AD713 (U9)					4		11
AD713 (U18)			4	11			
LM339A	3	12					
UCN-5815A	21	11					

DRAWN NRH	SIZE B	FSCM NO.	DWG. NO. 02-5761-30		REV 0
FILE 5761302.SCH	SCALE N/A	UNIT NAV2000R		SHEET 3 OF 3	

JcAIR INC.

NAME: SYNTHESIZER BD NAV 2000 ASSY NO: 20-5852-10

REVISION: 04 DATE: 11/06/2001

ITEM/ SYMBOL	JcAIR PART NO.	DESCRIPTION	U/M	QTY	MANUFACTURER	MANF'S P/N
1	09-5852-00	PCB SYNTHESIZER NAV 2000	EA	1.00	QMC	09-5852-00
2	30-9106-02	LATCH EJECTION HEADER LONG .576	EA	2.00	AMP	102320-1
					DUPONT	65824-001
3	89-9028-00	SCREW SELF-TAPPING PHP #2 TYPE F X .312L	EA	4.00	MIL SPEC	MS24629F-4
4	47-2089-18	FENCE SMALL NAV 2000R	EA	1.00	JCAIR	47-2089-18
5	47-2089-19	COVER FENCE SMALL NAV 2000R	EA	1.00	JCAIR	47-2089-19
6	47-2089-20	FENCE LARGE NAV 2000R	EA	1.00	JCAIR	47-2089-20
7	47-2089-21	COVER LARGE FENCE NAV 2000R	EA	1.00	JCAIR	47-2089-21
C1	CH-0101-20	CAP CK 100PF 200V 10%	EA	2.00	SPRAGUE	CK05BX101K
C2	CH-0104-00	CAP CK .1UF 50V 10%	EA	12.00	KEMET	C052K104K5X5CA
					MALLORY	CK05BX104K
					MIL SPEC	M39014/01-1473
					MIL SPEC	M39014/01-1553V
					SPRAGUE	CK05BX104K
C3	CH-0101-20	CAP CK 100PF 200V 10%	EA	-		
C4	CH-0103-00	CAP CK .01UF 50V 10%	EA	26.00	MALLORY	CK05BX103K
C5	CB-1475-01	CAP TN 4.7UF 10V 10%	EA	4.00	KEMET	T110A475K010AS
					MALLORY	TAC475K010P02
					MIL SPEC	M39003/01-2254
					SPRAGUE	150D475X9010A2
C7	CL-3104-50	CAP SM .1UF 50V 20% Z5U	EA	3.00	MURATA	GRM40Z5U104M050BB
C8	CL-3104-50	CAP SM .1UF 50V 20% Z5U	EA	-		
C9	CL-5103-30	CAP SM .01UF 50V 5% X7R	EA	1.00	KEMET	C1206C103J5RAC
C10	CL-3104-50	CAP SM .1UF 50V 20% Z5U	EA	-		
C12	CH-0103-00	CAP CK .01UF 50V 10%	EA	-		
C13	CH-0222-10	CAP CK 2200PF 100V 10%	EA	2.00	MALLORY	CK05BX222K
					SPRAGUE	CK05BX222K
C14	CH-0392-10	CAP CK .0039UF 100V 10%	EA	1.00	MALLORY	CK05BX392K
C15	CH-0222-10	CAP CK 2200PF 100V 10%	EA	-		
C16	CH-0104-00	CAP CK .1UF 50V 10%	EA	-		
C17	CH-0103-00	CAP CK .01UF 50V 10%	EA	-		
C18	CG-0056-02	CAP MC 5.6PF 200V 5% COG	EA	1.00	KEMET	C315C569J2G5CA
C19	CH-0103-00	CAP CK .01UF 50V 10%	EA	-		
C20	CH-1334-00	CAP CK .33UF 50V 10%	EA	1.00	KEMET	C062C334K5R5CA
					MALLORY	CK06BX334K
C29	CH-0103-00	CAP CK .01UF 50V 10%	EA	-		
C30	CH-0103-00	CAP CK .01UF 50V 10%	EA	-		
C31	CH-0103-00	CAP CK .01UF 50V 10%	EA	-		
C32	CB-1475-01	CAP TN 4.7UF 10V 10%	EA	-		
C33	CH-0103-00	CAP CK .01UF 50V 10%	EA	-		
C34	CH-0104-00	CAP CK .1UF 50V 10%	EA	-		
C35	CH-1474-00	CAP CK .47UF 50V 10%	EA	1.00	MALLORY	CK06BX474K
C36	CH-0471-20	CAP CK 470PF 200V 10%	EA	1.00	MALLORY	CK05BX471K
					MIL SPEC	M39014/01-1311
					SPRAGUE	CK05BX471K
C37	CD-3105-40	CAP MP 1UF 50V 5%	EA	1.00	MALLORY	168105J50G
C38	CB-1685-05	CAP TN 6.8UF 35V 10%	EA	3.00	KEMET	T110B685K035AS
					SPRAGUE	150D685X9035B2

JcAIR INC.

NAME: SYNTHESIZER BD NAV 2000 ASSY NO: 20-5852-10

REVISION: 04 DATE: 11/06/2001

ITEM/ SYMBOL	JcAIR PART NO.	DESCRIPTION	U/M	QTY	MANUFACTURER	MANF'S P/N
C39	CH-0104-00	CAP CK .1UF 50V 10%	EA	-		
C40	CH-0104-00	CAP CK .1UF 50V 10%	EA	-		
C41	CH-0223-00	CAP CK .022UF 50V 10%	EA	1.00	MALLORY	CK05BX223K
C42	CB-1685-05	CAP TN 6.8UF 35V 10%	EA	-		
C43	CH-0103-00	CAP CK .01UF 50V 10%	EA	-		
C44	CH-0104-00	CAP CK .1UF 50V 10%	EA	-		
C45	CB-1156-02	CAP TN 15UF 20V 5%	EA	1.00	KEMET	T110B156J020AS
					SPRAGUE	150D156X9020B2
C48	CB-1685-05	CAP TN 6.8UF 35V 10%	EA	-		
C49	CB-1105-05	CAP TN 1UF 35V 10%	EA	2.00	KEMET	T110A105K035AS
					SPRAGUE	150D105X9035A2
C50	CB-1106-06	CAP TN 10UF 50V 10%	EA	2.00	MIL SPEC	M39003/01-2374
					SPRAGUE	150D106X9050R2
C51	CB-1226-05	CAP TN 22UF 35V 10%	EA	2.00	MIL SPEC	M39003/01-2306/07
					SPRAGUE	150D226X9035R2
C52	CH-0104-00	CAP CK .1UF 50V 10%	EA	-		
C53	CB-1226-05	CAP TN 22UF 35V 10%	EA	-		
C54	CH-0104-00	CAP CK .1UF 50V 10%	EA	-		
C55	CB-1336-01	CAP TN 33UF 10V 10%	EA	3.00	KEMET	T110B336K010AS
					MIL SPEC	M39003/01-2257
C56	CH-0103-00	CAP CK .01UF 50V 10%	EA	-		
C58	CH-0103-00	CAP CK .01UF 50V 10%	EA	-		
C59	CB-1336-01	CAP TN 33UF 10V 10%	EA	-		
C60	CH-0104-00	CAP CK .1UF 50V 10%	EA	-		
C61	CB-1336-01	CAP TN 33UF 10V 10%	EA	-		
C62	CH-0104-00	CAP CK .1UF 50V 10%	EA	-		
C63	CH-0103-00	CAP CK .01UF 50V 10%	EA	-		
C64	CH-0103-00	CAP CK .01UF 50V 10%	EA	-		
C65	CH-0103-00	CAP CK .01UF 50V 10%	EA	-		
C66	CH-0103-00	CAP CK .01UF 50V 10%	EA	-		
C67	CH-0103-00	CAP CK .01UF 50V 10%	EA	-		
C68	CH-0103-00	CAP CK .01UF 50V 10%	EA	-		
C69	CH-0103-00	CAP CK .01UF 50V 10%	EA	-		
C70	CH-0103-00	CAP CK .01UF 50V 10%	EA	-		
C71	CH-0103-00	CAP CK .01UF 50V 10%	EA	-		
C72	CH-0103-00	CAP CK .01UF 50V 10%	EA	-		
C73	CH-0103-00	CAP CK .01UF 50V 10%	EA	-		
C74	CB-1105-05	CAP TN 1UF 35V 10%	EA	-		
C75	CH-0103-00	CAP CK .01UF 50V 10%	EA	-		
C76	CH-0103-00	CAP CK .01UF 50V 10%	EA	-		
C80	CH-0220-20	CAP CK 22PF 200V 10%	EA	1.00	SPRAGUE	CK05BX220K
C81	CH-0104-00	CAP CK .1UF 50V 10%	EA	-		
C82	CB-1106-06	CAP TN 10UF 50V 10%	EA	-		
C84	CH-0103-00	CAP CK .01UF 50V 10%	EA	-		
C87	CH-0103-00	CAP CK .01UF 50V 10%	EA	-		

JcAIR INC.

NAME: SYNTHESIZER BD NAV 2000 ASSY NO: 20-5852-10

REVISION: 04 DATE: 11/06/2001

ITEM/ SYMBOL	JcAIR PART NO.	DESCRIPTION	U/M	QTY	MANUFACTURER	MANF'S P/N
C88	CH-0104-00	CAP CK .1UF 50V 10%	EA	-		
C89	CH-0470-20	CAP CK 47PF 200V 10%	EA	1.00	MALLORY	CK05BX470K
					MIL SPEC	M39014/01-1293
					SPRAGUE	CK05BX470K
C90	CB-1475-01	CAP TN 4.7UF 10V 10%	EA	-		
C91	CB-1475-01	CAP TN 4.7UF 10V 10%	EA	-		
C92	CB-0226-03	CAP TN 22UF 20V 10%	EA	2.00	KEMET	T322B226K020AS
C93	CB-0226-03	CAP TN 22UF 20V 10%	EA	-		
CR1	07-6032-00	DIODE SIL 1N914 PKG=O TMP=O	EA	3.00	MICRO SEMI	1N914
CR2	07-6058-01	DIODE REC 1N4002 PKG=DO41	EA	2.00	MOTOROLA	1N4002
CR3	07-6058-01	DIODE REC 1N4002 PKG=DO41	EA	-		
CR4	07-6032-00	DIODE SIL 1N914 PKG=O TMP=O	EA	-		
CR5	07-6032-00	DIODE SIL 1N914 PKG=O TMP=O	EA	-		
FL1	44-0080-00	XTAL 10.700 MHZ 4 POLE PKG=HC49U	EA	1.00	FOX	10M12B
J1	30-2056-50	CONN HEADER EJECTION RT ANG 50 PIN	EA	1.00	AMP	1-102159-0
J2	30-1966-46	CONN HOUSING DBL ROW 46 POS	EA	1.00	AMP	2-535542-3
J5	30-1966-04	CONN HOUSING DBL ROW 4 POS	EA	1.00	AMP	535542-2
J6	30-0039-01	CONN BNC RCPT RT ANG PC MNT METAL	EA	2.00	AMP	227433-1
J7	30-0039-01	CONN BNC RCPT RT ANG PC MNT METAL	EA	-		
L1	19-2016-24	INDUCTOR MOLDED 15UH 205MA 2.8 OHM 10%	EA	3.00	DALE	IM-2 15UH 10%
					DELEVAN	4025-48
					JW MILLER	9230-48
					MIL SPEC	MS75084-14
					NYTRONICS	MD-15.0
					VANGUARD	15471
L2	19-2016-24	INDUCTOR MOLDED 15UH 205MA 2.8 OHM 10%	EA	-		
L5	19-2016-24	INDUCTOR MOLDED 15UH 205MA 2.8 OHM 10%	EA	-		
L9	19-2153-04	INDUCTOR MOLDED 3.3UH .140 OHM 10%	EA	2.00	DALE	IM-6 3.30UH 10%
					MIL SPEC	MS75101-01
L10	19-2153-03	INDUCTOR MOLDED 10UH .44A .605 OHM 10%	EA	2.00	DALE	IM-6 10UH 10%
					MIL SPEC	MS75101-7
L11	19-2153-04	INDUCTOR MOLDED 3.3UH .140 OHM 10%	EA	-		
L13	19-2016-31	INDUCTOR MOLDED 56UH 145MA 5.7 OHM 10%	EA	2.00	DALE	IM-2 56UH 10%
					DELEVAN	1025-62
					JW MILLER	9230-62
					MIL SPEC	MS75085-04
					NYTRONICS	MD-56.0
					VANGUARD	15478
L14	19-2153-03	INDUCTOR MOLDED 10UH .44A .605 OHM 10%	EA	-		
L15	19-2016-34	INDUCTOR MOLDED 100UH 125MA 8.0 OHM 10%	EA	1.00	DALE	IM-2 100UH 10%
					DELEVAN	1025-68
					JW MILLER	9230-68
					MIL SPEC	MS75085-07
					NYTRONICS	MD-100
					VANGUARD	15481

NAME: SYNTHESIZER BD NAV 2000 ASSY NO: 20-5852-10

REVISION: 04 DATE: 11/06/2001

ITEM/ SYMBOL	JcAIR PART NO.	DESCRIPTION	U/M	QTY	MANUFACTURER	MANF'S P/N
L17	19-2016-31	INDUCTOR MOLDED 56UH 145MA 5.7 OHM 10%	EA	-		
Q1	07-0159-00	XSTR NPN 2N3904 PKG=TO92	EA	1.00	GE	2N3904
					MOTOROLA	2N3904
Q2	07-0018-02	XSTR FET J310 N-CHANL PKG=TO-92 TMP=M	EA	2.00	MOTOROLA	J310
Q3	07-0018-02	XSTR FET J310 N-CHANL PKG=TO-92 TMP=M	EA	-		
R1	RB-0122-23	RES CF 1.2K QW 5%	EA	1.00	NIC	NCF25-1.2K-B
R2	RB-0472-23	RES CF 4.7K QW 5%	EA	1.00	NIC	NCF25-4.7K-B
R3	RB-0102-23	RES CF 1K QW 5%	EA	2.00	NIC	NCF25-1K-B
R4	RB-0104-23	RES CF 100K QW 5%	EA	2.00	NIC	NCF25-100K-B
R5	RB-0331-23	RES CF 330 QW 5%	EA	1.00	NIC	NCF25-330-B
R7	RB-0221-23	RES CF 220 QW 5%	EA	1.00	NIC	NCF25-220-B
R8	RB-0103-23	RES CF 10K QW 5%	EA	3.00	NIC	NCF25-10K-B
R9	RB-0103-23	RES CF 10K QW 5%	EA	-		
R10	RB-0750-23	RES CF 75 QW 5%	EA	6.00	BEC	B25J 75
R11	RC-5620-12	RES MF 562 EW 1%	EA	1.00	DALE	CMF-55 5620FT-1
					MIL SPEC	RN-55D 5620F
R12	RB-0750-23	RES CF 75 QW 5%	EA	-		
R13	RB-0750-23	RES CF 75 QW 5%	EA	-		
R14	RB-0101-23	RES CF 100 QW 5%	EA	9.00	NIC	NCF25-100-B
R15	RB-0220-23	RES CF 22 QW 5%	EA	1.00	NIC	NCF25-22-B
R16	RB-0104-23	RES CF 100K QW 5%	EA	-		
R17	RB-0750-23	RES CF 75 QW 5%	EA	-		
R18	RB-0681-23	RES CF 680 QW 5%	EA	1.00	NIC	NCF25-680-B
R20	RC-1001-29	RES MF 1K QW .1%	EA	1.00	DALE	CMF-60 1001BT-2
R21	RB-0100-23	RES CF 10 QW 5%	EA	2.00	NIC	NCF25-10-B
R24	RA-0101-33	RES CC 100 HW 5%	EA	1.00	ALLEN-BRADLEY	EB-1015
					ALLEN-BRADLEY	RC20GF101J
					MIL SPEC	RC20G101J
R25	RA-0220-23	RES CC 22 QW 5%	EA	1.00	ALLEN-BRADLEY	CB-2205
					MIL SPEC	RC07G220J
R26	RB-0750-23	RES CF 75 QW 5%	EA	-		
R27	RB-0470-23	RES CF 47 QW 5%	EA	1.00	NIC	NCF25-47-B
R28	RB-0562-23	RES CF 5.6K QW 5%	EA	1.00	NIC	NCF25-5.6K-B
R29	RB-0102-23	RES CF 1K QW 5%	EA	-		
R30	RB-0101-23	RES CF 100 QW 5%	EA	-		
R31	RB-0101-23	RES CF 100 QW 5%	EA	-		
R32	RC-1303-12	RES MF 130K EW 1%	EA	1.00	DALE	CMF-55 1303FT-1
					MIL SPEC	RN-55D 1303F
R33	RB-0101-23	RES CF 100 QW 5%	EA	-		
R34	RC-2430-12	RES MF 243 EW 1%	EA	1.00	DALE	CMF-55 2430FT-1
					MIL SPEC	RN-55D 2430F
R35	RC-2001-12	RES MF 2K EW 1%	EA	1.00	DALE	CMF-55 2001FT-1
					MIL SPEC	RN-55D 2001F
R38	RB-0273-23	RES CF 27K QW 5%	EA	1.00	NIC	NCF25-27K-B
R39	RB-0101-23	RES CF 100 QW 5%	EA	-		
R40	RB-0101-23	RES CF 100 QW 5%	EA	-		
R41	RB-0332-23	RES CF 3.3K QW 5%	EA	1.00	NIC	NCF25-3.3K-B
R42	RB-0750-23	RES CF 75 QW 5%	EA	-		

NAME: SYNTHESIZER BD NAV 2000 ASSY NO: 20-5852-10

REVISION: 04 DATE: 11/06/2001

ITEM/ SYMBOL	JcAIR PART NO.	DESCRIPTION	U/M	QTY	MANUFACTURER	MANF'S P/N
R43	RB-0471-23	RES CF 470 QW 5%	EA	2.00	NIC	NCF25-470-B
R48	RB-0101-23	RES CF 100 QW 5%	EA	-		
R50	RB-0471-23	RES CF 470 QW 5%	EA	-		
R51	RB-0103-23	RES CF 10K QW 5%	EA	-		
R53	RB-0100-23	RES CF 10 QW 5%	EA	-		
R54	RB-0101-23	RES CF 100 QW 5%	EA	-		
R55	RB-0101-23	RES CF 100 QW 5%	EA	-		
RN1	RH-4103-16	RES RN 10K X 9 BUSSED	EA	6.00	BOURNS	4610X-101-103
					DALE	CSC10A-01-103G
					PANASONIC	EX8-R89103K
RN2	RH-4103-16	RES RN 10K X 9 BUSSED	EA	-		
RN3	RH-4103-16	RES RN 10K X 9 BUSSED	EA	-		
RN4	RH-4103-16	RES RN 10K X 9 BUSSED	EA	-		
RN5	RH-4103-16	RES RN 10K X 9 BUSSED	EA	-		
RN6	RH-4103-16	RES RN 10K X 9 BUSSED	EA	-		
T1	19-0014-00	INDUCTOR VARIABLE 47PF 10.7MHZ Q=110 +5	EA	4.00	SUMIDA TECH INC	0133-T019
					TOKO	154AC-470032NO
T2	19-0014-00	INDUCTOR VARIABLE 47PF 10.7MHZ Q=110 +5	EA	-		
T3	19-0014-00	INDUCTOR VARIABLE 47PF 10.7MHZ Q=110 +5	EA	-		
T7	19-0014-00	INDUCTOR VARIABLE 47PF 10.7MHZ Q=110 +5	EA	-		
U1	60-0400-00	PROG EPROM SYNTH CONTROLLER VER 1.00	EA	1.00	JCAIR	60-0400-00
U2	12-7623-00	IC 6264 RAM PKG=P28 TMP=O SPD=100NS	EA	1.00	HITACHI	HM6264BLPI-10
					NEC	UPD4364C12-L
					SHARP	LH5164A-10L
U3	12-8050-00	IC 74AC245 TRANSCEIVER PKG=P20 TMP=M	EA	1.00	RCA	CD74AC245E
U4	12-8052-00	IC 74AC373 OCTAL LATCH PKG=P20 TMP=M	EA	1.00	MOTOROLA	MC74AC373N
					NATIONAL	74AC373P
					RCA	CD74AC373E
					TI	SN74AC373N
U5	12-7601-00	IC 74HC245 BUS TRANSCEIVER PKG=P20 TMP=I	EA	1.00	MOTOROLA	MC74HC245N
					NATIONAL	MM74HC245N
					RCA	CD74HC245E
					TI	SN74HC245N
U6	12-7716-00	IC 74HC377 OCTAL D F/F W/CLOCK ENABLE	EA	2.00	RCA	CD74HC377E
					SIGNETICS	74HC377N
					TI	SN74HC377N
U7	12-7716-00	IC 74HC377 OCTAL D F/F W/CLOCK ENABLE	EA	-		
U8	12-7600-00	IC 74HC541 OCTL BFR/LINE DRV PKG=P20 T=I	EA	2.00	MOTOROLA	MC74HC541N
					NATIONAL	MM74HC541N
					RCA	CD74HC541E
U9	12-7600-00	IC 74HC541 OCTL BFR/LINE DRV PKG=P20 T=I	EA	-		
U10	12-7542-00	IC 74HC373 OCTAL D LATCH PKG=P20 TMP=I	EA	1.00	NATIONAL	MM74HC373N
U11	12-7856-00	IC 74AC109 DUAL JK F/F PKG=P16 TMP=M	EA	1.00	RCA	CD74AC109E
U12	12-8041-00	IC 74AC14 SCHMITT TRIGGER PKG=P14 TMP=M	EA	1.00	RCA	CD74AC14E

NAME: SYNTHESIZER BD NAV 2000 ASSY NO: 20-5852-10

REVISION: 04 DATE: 11/06/2001

ITEM/ SYMBOL	JcAIR PART NO.	DESCRIPTION	U/M	QTY	MANUFACTURER	MANF'S P/N
U13	12-7553-00	IC 74HC32 QUAD OR GATE PKG=P14 TMP=I	EA	1.00	MOTOROLA	MC74HC32N
					NATIONAL	MM74HC32N
					RCA	CD74HC32E
					TI	SN74HC32N
U14	12-8038-00	IC 74AC08 QUAD AND GATE PKG=P14 TMP=M	EA	1.00	RCA	CD74AC08E
U15	12-8094-00	IC 2334 DUAL DDS PKG=L68 TMP=I	EA	1.00	QUALCOMM	Q2334I-20N
U16	12-8782-01	IC 9760 D/A CONVERTER PKG=P28 TMP=I	EA	1.00	ANALOG DEVICES	AD9760ARU
U17	12-7826-00	IC 589 VOLT REFERENCE PKG=O TMP=C V=1.2	EA	1.00	ANALOG DEVICES	AD589KH
U18	12-7264-00	IC 74HC04 HEX INVERTER PKG=P14 TMP=I	EA	1.00	MOTOROLA	MC74HC04N
					NATIONAL	MM74HC04N
					RCA	CD74HC04E
					SSS	SS74HC04N
					TI	SN74HC04N
U20	12-7720-00	IC 1016 COMPARATOR PKG=P08 TMP=C V=5	EA	1.00	LINEAR TECH	LT1016CN
U21	12-7983-00	IC 74HCT14 HEX INV TRIGGER PKG=P14 TMP=I	EA	1.00	SIGNETICS	74HCT14N
U22	12-7835-00	IC 74HCT32 QUAD OR GATE PKG=P14 TMP=I	EA	1.00	RCA	CD74HCT32N
					SIGNETICS	74HCT32N
U23	12-8164-00	IC 74HC4046A CMOS LOGIC PKG=P16 TMP=I	EA	1.00	RCA	CD74HC4046AE
U24	12-7023-00	IC 1458 DUAL OP AMP PKG=P08 TMP=C	EA	1.00	KUSTOM	007-7023-00
					MOTOROLA	MC1458CP1
					NATIONAL	LM1458N
U25	12-7550-00	IC 74HC4066 QUAD ANALOG SWITCH	EA	1.00	MOTOROLA	MC74HC4066N
					NATIONAL	MM74HC4066N
					RCA	CD74HC4066N
U26	12-7322-01	IC 317 ADJ POS REGULATOR PKG=TO220 TMP=C	EA	1.00	MOTOROLA	LM317T
					NATIONAL	LM317T
U28	12-8182-00	IC 1054 VOLTAGE CONVERTER PKG=C08 TMP=M	EA	1.00	LINEAR TECH	LT1054MJ
U29	12-7702-00	IC 74HC367 HEX BUS DRIVER PKG=P16 TMP=I	EA	1.00	FAIRCHILD	74HC367P
					MOTOROLA	MC74HC367P
					NATIONAL	MM74HC367N
					RCA	CD74HC367E
					SIGNETICS	74HC367N
					TI	SN74HC367N
U30	12-8042-00	IC 74AC138 DECDR/DEMLTPLXR PKG=P16 TMP=M	EA	1.00	RCA	CD74AC138E
U31	12-8193-01	IC 78M05 VOLT REG PKG=221A-04 TMP=O V=5	EA	1.00	MOTOROLA	MC78M05CT
XU1	33-0008-40	SOCKET 40 PIN DIP OPEN LADDER MACHINED	EA	1.00	AUGAT	840-AG11D
					ROBINSON-NUGENT	ICT-406-S-TG
					SPC	MP-40-3G
XU15	33-0011-68	SOCKET PLCC 68 PIN SOLDER TAIL	EA	1.00	AMP	641749-2
Y1	15-0018-00	OSCILLATOR 10 MHZ <2.5PPM PKG=X151	EA	1.00	OSCILLATEK	5793
REF1	02-5852-10	SCHEMATIC SYNTHESIZER BOARD NAV2000R	EA	-		
REF2	25-5852-10	ASSY DWG SYNTHESIZER BOARD NAV2000R	EA	-		

REV	DESCRIPTION	DATE	APPROVED
1	ADD IN AND OUT TO FL1A AND FL1B	[illegible]	[illegible]
2	ADD NOTE 3 AND COMPONENTS	10MAY00	[illegible]
3	CHANGE NOTE [illegible] FROM 28 [illegible] U25-2	[illegible]	[illegible]
4	UPDATE PER NEW ARTWORK	[illegible]	[illegible]
5	DOCUMENTATION CHANGE	[illegible]	HUFFMAN
6	ADD NOTES 4 AND 5	[illegible]	[illegible]

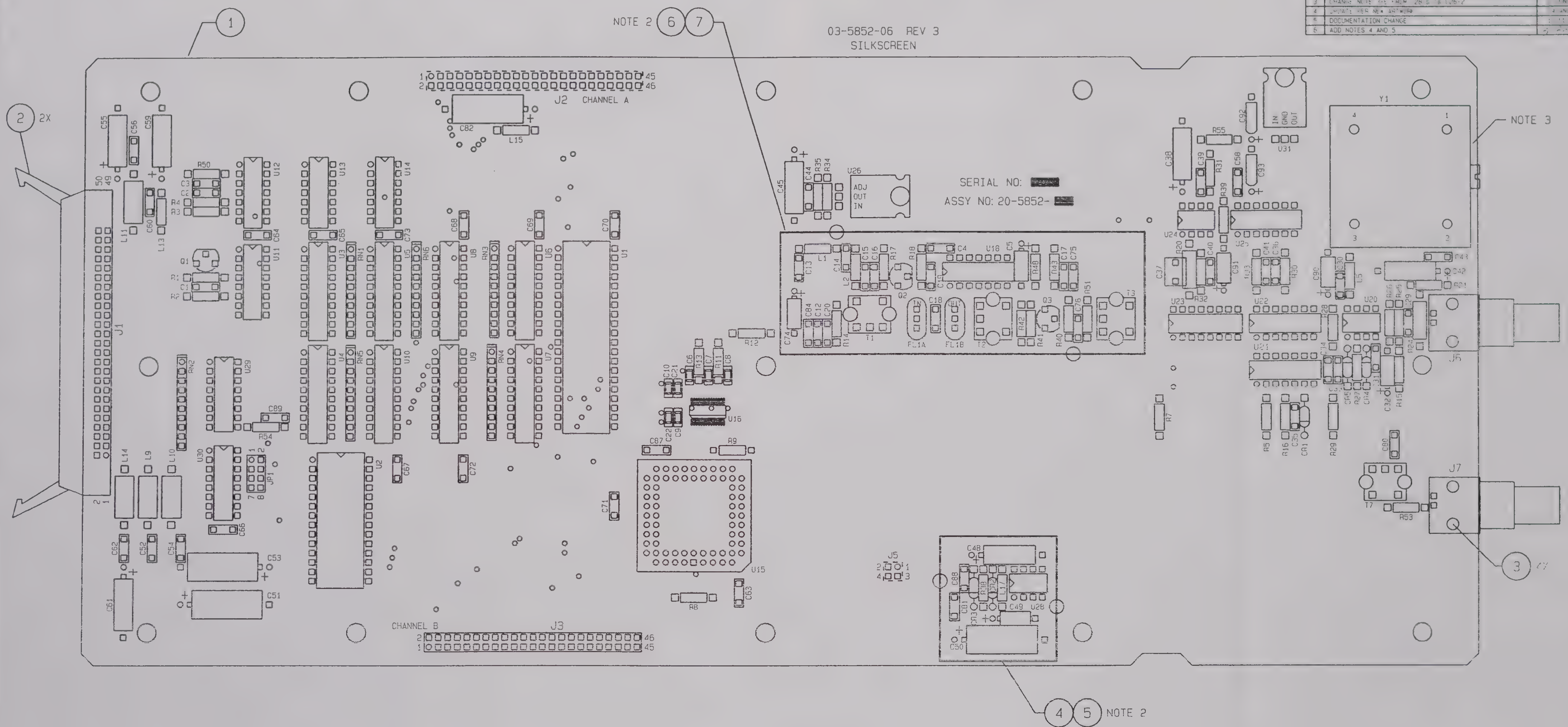

NOTES:

1. FOR COMPLETE ITEM DESCRIPTION REFERENCE BILL OF MATERIALS 20-5852-XX.
2. SOLDER FENCE TO BOARD WITH A CONTINUOUS BEAD OF SOLDER.
3. INSULATE FL1, FL2 AND Y1 FROM BOARD SURFACE WITH MYLAR.
4. DRILL OUT PLATED-THRU SCREW MOUNTING HOLE FOR U26 TAB.
5. MAKE THE FOLLOWING CUTS AND JUMPS.
   - A) CUT TRACES ON BOTH SIDES OF U13-6 SOLDER SIDE.
   - B) CUT TRACE FROM U15-37 SOLDER SIDE.
   - C) JUMPER BETWEEN U13-6 AND U15-37.
   - D) JUMPER BETWEEN THE TWO CUT TRACES AROUND U13-6 AT VIA HOLES.

NEXT ASS'Y	USED ON
20-5852-10	01-0520-XX
UNIT	NAV 2000R

DIMENSIONS ARE IN INCHES
TOLERANCES ARE
DECIMALS .XX ± .01 .XXX ± .005 FRACTIONS ± 1/64 ANGLES ± 1/2 DEG

MATERIAL: FR4 .062 THK 1 OZ CU

FINISH: NA

BFGOODRICH AEROSPACE PROPRIETARY INFORMATION

APPROVALS		DATE
DRAWN	NRH	7-30-92
CHECKED	DWH	2-22-93
ISSUED		

FILE NAME: 585200R3.PCB

GOODRICH

JcAIR TEST SYSTEMS
GOODRICH CORPORATION
400 NEW CENTURY PKWY
NEW CENTURY KS 66031-0009 USA
PHONE (913) 764-2452
FAX (913) 782-5104

ASSEMBLY
SYNTHESIZER BOARD

SIZE B | CAGE NO 41364 | DWG NO 25-5852-10 | REV 6

SHEET 1 OF 1

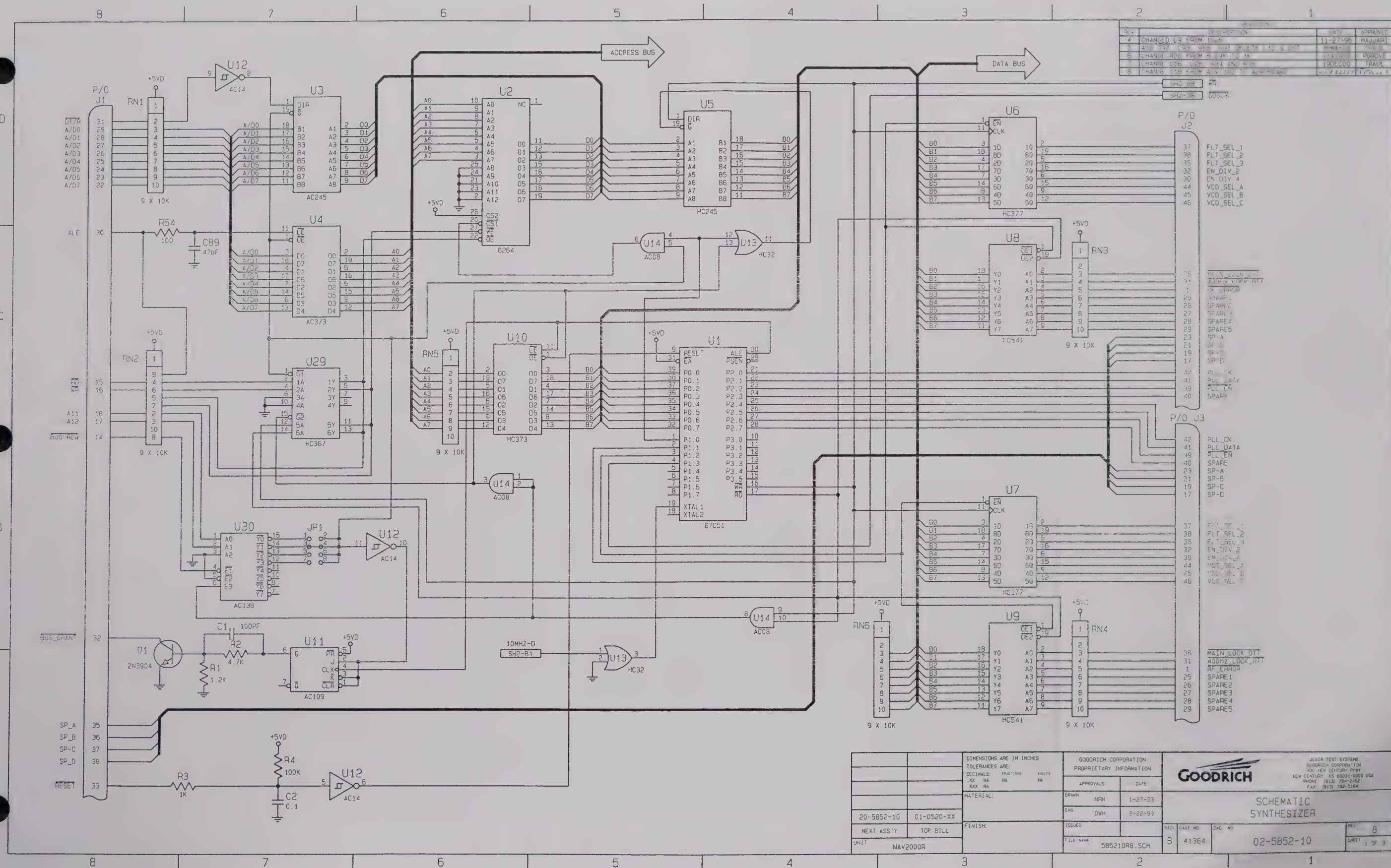
ADDRESS BUS
DATA BUS
P/O J1
P/O J2
P/O J3
U1
U2
U3
U4
U5
U6
U7
U8
U9
U10
U11
U12
U13
U14
U29
U30
RN1
RN2
RN3
RN4
RN5
RN6
JP1
Q1
2N3904
R1
1.2K
R2
4.7K
R3
1K
R4
100K
R54
100
C1
100PF
C2
0.1
C89
47pF
10MHZ-D
SH2-B1
SH2-B8
SH2-J5
FLT_SEL_1
FLT_SEL_2
FLT_SEL_3
EN_DIV_2
EN_DIV_4
VCO_SEL_A
VCO_SEL_B
VCO_SEL_C
SPARE4
SPARE5
SP-A
SP-B
SP-C
SP-D
PLL_CK
PLL_DATA
PLL_EN
SPARE
MAIN_LOCK_DTT
400hz_LOCK_DTT
RF_ERROR
SPARE1
SPARE2
SPARE3
SPARE4
SPARE5
9 X 10K
+5VD
AC14
AC245
AC373
AC136
AC109
AC08
HC245
HC377
HC541
HC367
HC373
HC32
6264
87C51
BUS_GRANT
RESET
BUS_REQ
ALE
A11
A12
SP_A
SP_B
SP_C
SP_D
DIMENSIONS ARE IN INCHES
TOLERANCES ARE:
DECIMALS: .XX NA .XXX NA
FRACTIONS: NA
ANGLES: NA
MATERIAL:
FINISH:
20-5852-10
01-0520-XX
NEXT ASS'Y
TOP BILL
UNIT
NAV2000R
GOODRICH CORPORATION
PROPRIETARY INFORMATION
APPROVALS
DATE
DRAWN NRH 1-27-93
ENG DWH 2-22-93
ISSUED
FILE NAME 585210R8.SCH
GOODRICH
JCAIR TEST SYSTEMS
GOODRICH CORPORATION
400 NEW CENTURY PKWY
NEW CENTURY, KS 66031-0009 USA
PHONE (913) 764-2452
FAX (913) 782-5104
SCHEMATIC
SYNTHESIZER
SIZE B
CAGE NO 41364
DWG NO 02-5852-10
REV 8
SHEET 1 OF 3

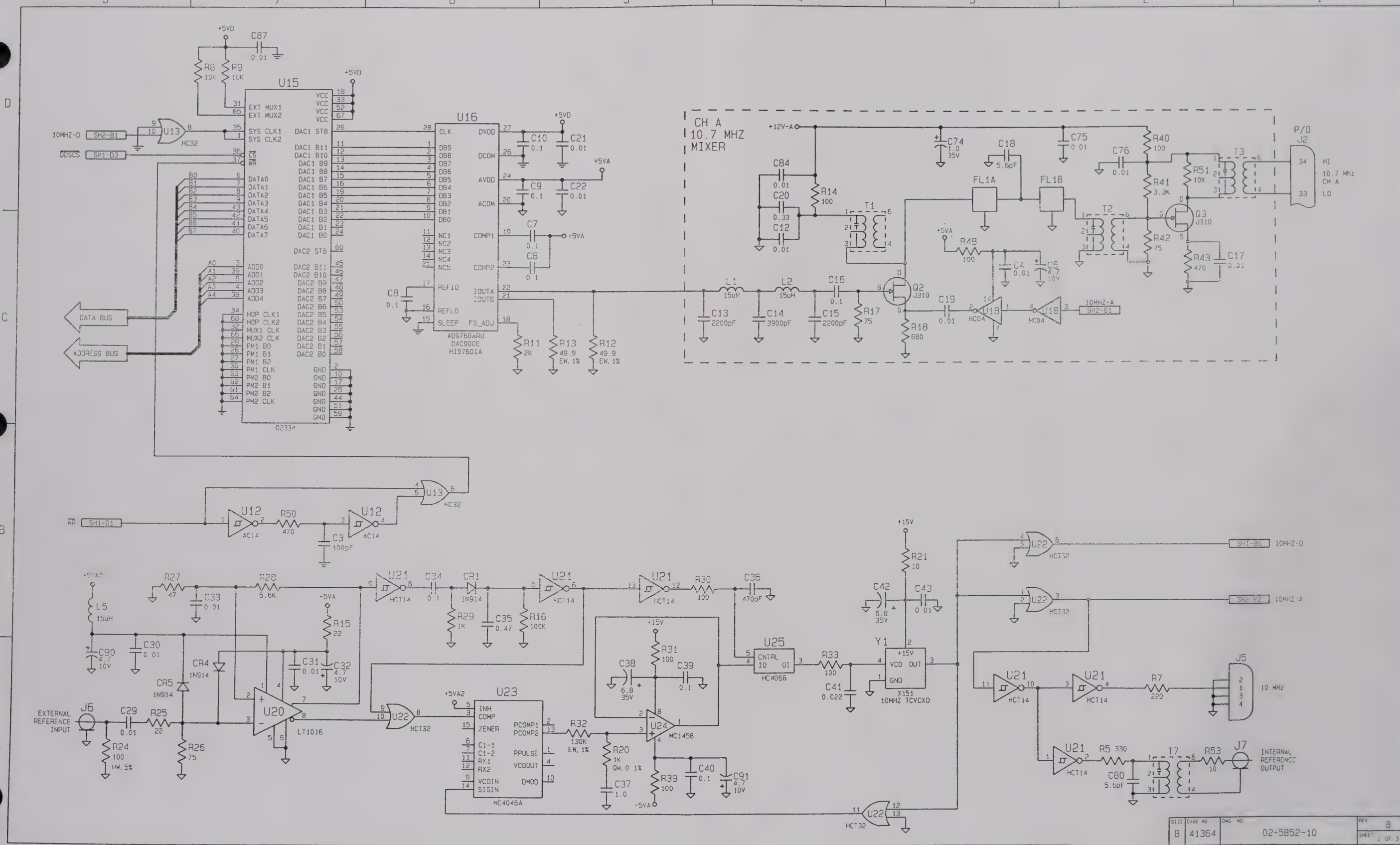

U15
Q2334
U16
AD9760ARU
DAC900E
HI5760IA
CH A
10.7 MHZ
MIXER
P/O
J2
HI
10.7 Mhz
CH A
LO
DATA BUS
ADDRESS BUS
10MHZ-D
ODSCS
10MHZ-A
EXTERNAL
REFERENCE
INPUT
J6
U20
LT1016
U23
HC4046A
U24
MC1458
U25
HC4066
Y1
X151
10MHZ TCVCXO
J5
10 MHz
J7
INTERNAL
REFERENCE
OUTPUT
SIZE
B
CAGE NO
41364
DWG NO
02-5852-10
REV
8
SHEET
2 OF 3

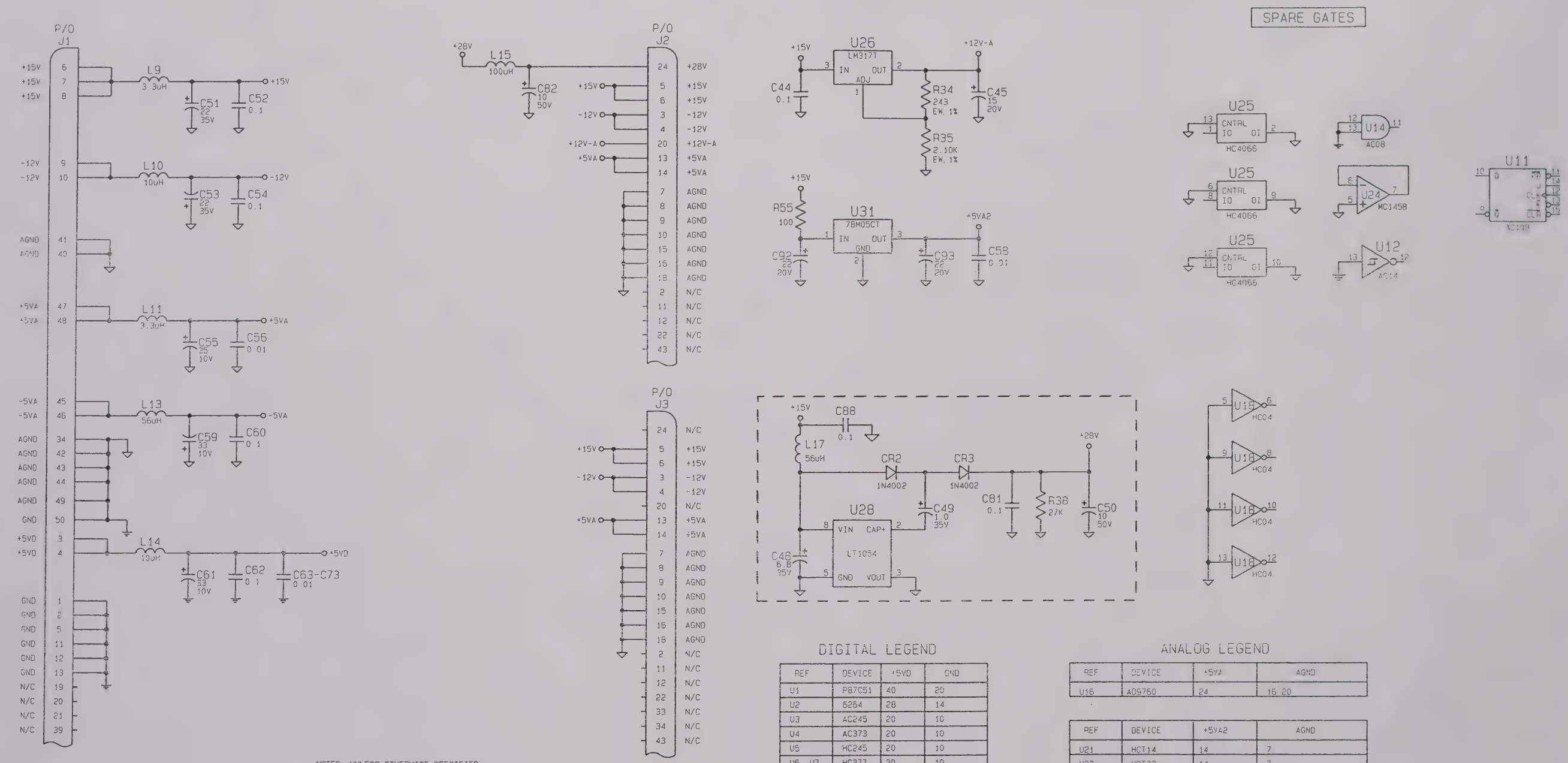

NOTES: UNLESS OTHERWISE SPECIFIED:

1. RESISTANCE IS EXPRESSED IN OHMS, QW, 5%.
2. CAPACITANCE IS EXPRESSED IN MICROFARADS.
3. INDUCTANCE IS EXPRESSED IN MICROHENERIES.

DIGITAL LEGEND

REF	DEVICE	+5VD	GND
U1	P87C51	40	20
U2	6264	28	14
U3	AC245	20	10
U4	AC373	20	10
U5	HC245	20	10
U6, U7	HC377	20	10
U8, U9	HC541	20	10
U10	HC373	20	10
U11	AC109	16	8
U12	AC14	14	7
U13	HC32	14	7
U14	AC08	14	7
U15	Q2334	18, 33, 52, 67	2, 10, 17, 25 44, 51, 59
U16	AD9760	27	15, 26
U29	AC367	16	8
U30	AC138	16	8

ANALOG LEGEND

REF	DEVICE	+5VA	AGND
U16	AD9760	24	16 20

REF	DEVICE	+5VA2	AGND
U21	HCT14	14	7
U22	HCT32	14	7
U23	HC4046	16	8
U25	HC4066	14	7

SIZE	CAGE NO.	DWG NO	REV
B	41364	02-5852-10	8

SHEET 3 OF 3

JcAIR INC.

NAME: 400 MHZ VCO BOARD NAV 2000R

ASSY NO: 20-5866-00

REVISION: 03

DATE: 05/23/2000

ITEM/ SYMBOL	JcAIR PART NO.	DESCRIPTION	U/M	QTY	MANUFACTURER	MANF'S P/N
1	09-5866-00	PCB 400 MHZ VCO NAV 2000	EA	1.00	QMC	09-5866-00
C1	CL-4056-01	CAP SM 5.6PF 100V +/-.5PF COG	EA	1.00	KEMET	C1206A5R6DXBMT
C2	CL-5222-31	CAP SM 2200PF 100V 5% X7R	EA	1.00	KEMET	C1206C222J1RAC
C3	CL-4271-31	CAP SM 270PF 100V 5% COG	EA	3.00	VITRAMON	VJ1206A271JXBMT
C4	CM-2390-55	CAP RF 39PF 500V 10%	EA	1.00	ATC	ATC100B390KP500X
C5	CM-2075-55	CAP RF 7.5PF 500V 10%	EA	1.00	ATC	ATC100B7R5KP500X
C6	CM-2091-55	CAP RF 9.1PF 500V 10%	EA	1.00	ATC	ATC100B9R1KP500X
C7	CL-4101-31	CAP SM 100PF 100V 5% COG	EA	1.00	VITRAMON	VJ1206A101JXBMT
C8	CL-5562-31	CAP SM 5600PF 100V 5% X7R	EA	1.00	KEMET	C1206C562J1RAC
C9	CM-1751-70	CAP RF 750PF 50V 20%	EA	1.00	ATC	ATC700B751MP50X
C10	CM-2301-62	CAP RF 300PF 200V 10%	EA	2.00	ATC	ATC100B301KP200X
C11	CM-2301-62	CAP RF 300PF 200V 10%	EA	-		
C12	CM-2180-55	CAP RF 18PF 500V 5%	EA	1.00	ATC	ATC100B180KP500X
C13	CL-4271-31	CAP SM 270PF 100V 5% COG	EA	-		
C14	CB-1156-02	CAP TN 15UF 20V 5%	EA	1.00	KEMET	T110B156J020AS
					SPRAGUE	150D156X9020B2
C15	CL-5223-31	CAP SM .022UF 100V 5% X7R	EA	1.00	KEMET	C1206C223J1RAC
C16	CL-4271-31	CAP SM 270PF 100V 5% COG	EA	-		
C17	CL-5473-30	CAP SM .047UF 50V 5% Z7R	EA	1.00	KEMET	C1206C473J5RAC
CR1	07-4001-17	DIODE VAR SMV1400-17 8.2PF 10%	EA	1.00	ALPHA	SMV1400-17
L1	19-2016-02	INDUCTOR MOLDED .22UH 935MA .14 OHM 10%	EA	2.00	DALE	IM-2 .22UH 10%
					DELEVAN	1025-04
					JW MILLER	9230-04
					MIL SPEC	MS75083-05
					NYTRONICS	MD-0.22
					VANGUARD	15449
L2	19-2016-04	INDUCTOR MOLDED .33UH 780MA .20 OHM 10%	EA	1.00	DALE	IM-2 .33UH 10%
					DELEVAN	1025-08
					JW MILLER	9230-08
					MIL SPEC	MS75083-07
					NYTRONICS	MD-0.33
					VANGUARD	15451
L3	19-2016-02	INDUCTOR MOLDED .22UH 935MA .14 OHM 10%	EA	-		
Q1	07-0131-01	XSTR NPN BFR91 PKG=0 TMP=0	EA	1.00	MOTOROLA	BFR91
Q2	07-0019-00	XSTR FET MMBFJ310L AMPLF PKG=SOT-23 T=0	EA	1.00	MOTOROLA	MMBFJ310L
Q3	07-0159-00	XSTR NPN 2N3904 PKG=TO92	EA	1.00	GE	2N3904
					MOTOROLA	2N3904
R1	RE-0220-27	RES SM 22 EW 5%	EA	2.00	KOA SPEER	RM73B2BT 220J
R2	RE-0101-27	RES SM 100 EW 5%	EA	2.00	KOA SPEER	RM73B2B 101JT-X
R3	RE-0220-27	RES SM 22 EW 5%	EA	-		
R4	RE-0221-27	RES SM 220 EW 5%	EA	2.00	DALE	CRCW1206-221JB
R5	RE-0680-27	RES SM 68 EW 5%	EA	3.00	KOA SPEER	RM73B2B 680J
R6	RE-0272-27	RES SM 2.7K EW 5%	EA	1.00	KOA SPEER	RM73B2BT 272J
R7	RE-0751-27	RES SM 750 EW 5%	EA	1.00	KOA SPEER	RM73B2B 751J
R8	RE-0680-27	RES SM 68 EW 5%	EA	-		
R9	RE-1501-24	RES SM 1.5K EW 1%	EA	3.00	KOA SPEER	RK73H2BTE 1501F
R10	RE-0101-27	RES SM 100 EW 5%	EA	-		
R11	RE-1501-24	RES SM 1.5K EW 1%	EA	-		
R12	RE-0221-27	RES SM 220 EW 5%	EA	-		

JcAIR INC.

NAME: 400 MHZ VCO BOARD NAV 2000R ASSY NO: 20-5866-00

REVISION: 03 DATE: 05/23/2000

ITEM/ SYMBOL	JcAIR PART NO.	DESCRIPTION	U/M	QTY	MANUFACTURER	MANF'S P/N
R13	RE-0680-27	RES SM 68 EW 5%	EA	-		
R14	RE-1501-24	RES SM 1.5K EW 1%	EA	-		
T1	19-7133-00	TRANSFORMER BALUN SRFC MNT 6MHZ-600MHZ	EA	1.00	TOKO	458DB-1008
REF1	02-5866-00	SCHEMATIC 400 MHZ VCO BD NAV 2000R	EA	-		
REF2	25-5866-00	ASSY DWG 400 MHZ VCO BD NAV 2000R	EA	-		

REVISIONS			
REV.	DESCRIPTION	DATE	APPROVED
1	ADD NOTE 2	1-4-94	JARBOE
2	ADD R14 AND C17, DETAIL A	30MAY00	TRAUL
3	RELABEL L1 TO L2 IN DETAIL A	27JUN00	T JARBOE
4	CHANGE NOTE 2 FROM CD TO CM CAPS, Q1 ORIENTATION	11-02-00	

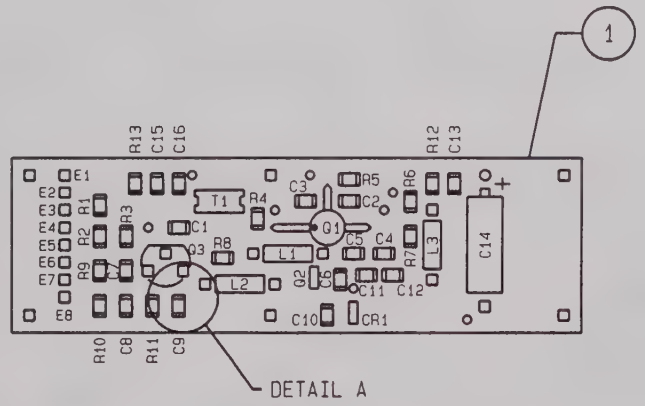

TEPEE R14 AND C17 WITH CONNECTION BETWEEN THEM IN MID-AIR.

DETAIL A

NOTES:

1. FOR COMPLETE ITEM DESCRIPTION REFERENCE BILL OF MATERIALS 20-5866-00.
2. INSTALL ALL CM CAPS ON THEIR SIDES.

		DIMENSIONS ARE IN INCHES TOLERANCES ARE: DECIMALS: .XX ± 01, XXX ± .005 FRACTIONS: ± 1/64 ANGLES: ± 1/2 DEG	BFGOODRICH AEROSPACE PROPRIETARY INFORMATION	BFGoodrich Aerospace JcAIR Test Systems	400 NEW CENTURY PARKWAY NEW CENTURY, KS 66031-0009 USA PHONE (913) 764-2452 FAX (913) 782-5104
			APPROVALS / DATE		
		MATERIAL 3M GX03005511 .030 THK 1 OZ CU	DRAWN NRH 11-30-92 CHECKED TRAUL 6/1/00	ASSEMBLY 400MHZ VCO	
20-5866-00	01-0520-XX	FINISH NA	ISSUED 11/29/00 FILE NO. 586600A0.PCB	SIZE A / CAGE NO. 41364 / DWG. NO. 25-5866-00	REV. 4 SHEET 1 OF 1
NEXT ASS'Y	USED ON				
UNIT NAV 2000R					

REVISIONS			
REV	DESCRIPTION	DATE	APPROVED
1	CHANGE VALUES OF C6 AND C9	5-3-93	DWH
2	ADD R14 AND C17	6/1/00	

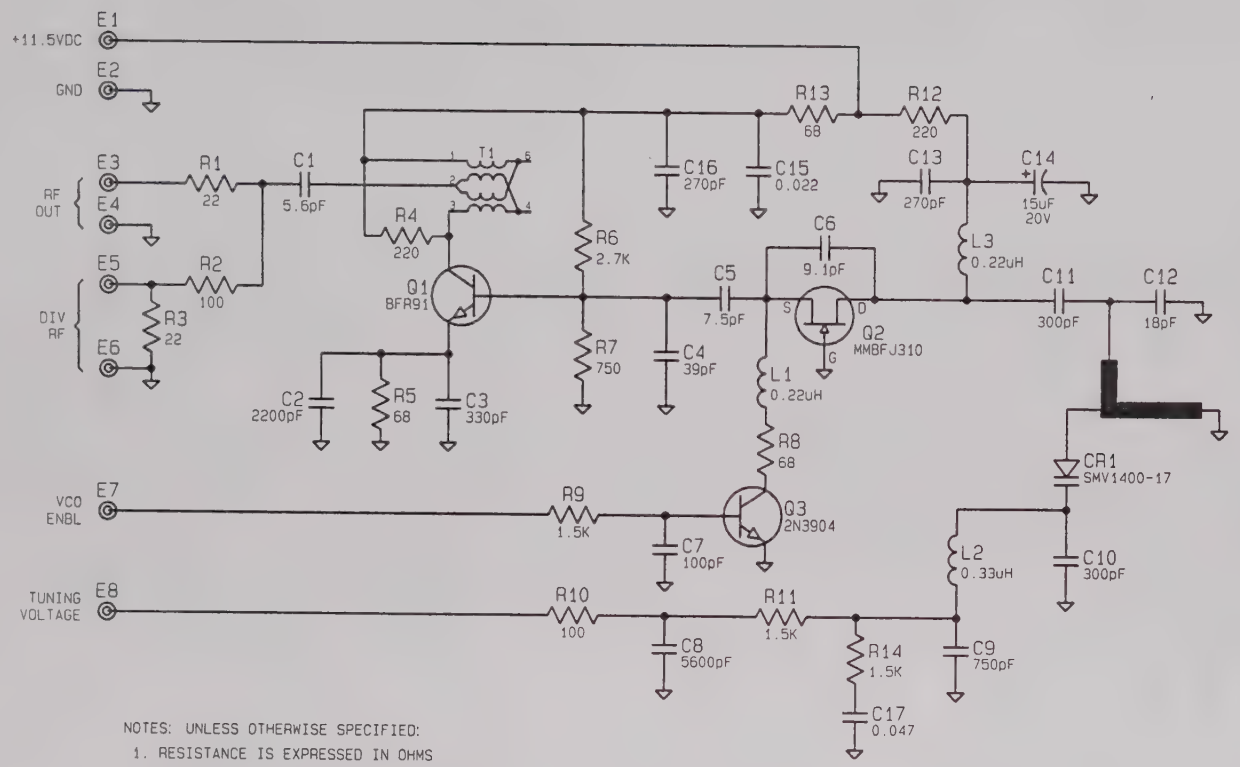

NOTES: UNLESS OTHERWISE SPECIFIED:

1. RESISTANCE IS EXPRESSED IN OHMS
2. CAPACITANCE IS EXPRESSED IN MICROFARADS.
3. INDUCTANCE IS EXPRESSED IN MICROHENRYS.

20-5866-00	01-0520-XX
NEXT ASS'Y	USED ON
UNIT: NAV 2000R	

DIMENSIONS ARE IN INCHES
TOLERANCES ARE
DECIMALS: XX ±.01, XXX ±.005 FRACTIONS: ± 1/64 ANGLES: ±1/2 DEG

MATERIAL: N/A

FINISH: N/A

BFGOODRICH AEROSPACE PROPRIETARY INFORMATION

APPROVALS	DATE
DRAWN NRH	4-8-93
CHECKED DWH	2-22-93
ISSUED	6/1/00

FILENAME: 586600R2.SCH

BFGoodrich Aerospace
JCAIR Test Systems
400 NEW CENTURY PARKWAY
NEW CENTURY, KS 66031-0009 USA
PHONE (913) 764-2452
FAX (913) 782-5104

SCHEMATIC
400MHZ VCO

SIZE	CAGE NO	DWG NO	REV
A	41364	02-5866-00	2

SHEET 1 OF 1

JcAIR INC.

NAME: MAIN VCO BOARD NAV 2000 ASSY NO: 20-5867-00

REVISION: 02 DATE: 04/27/95

ITEM/ SYMBOL	JcAIR PART NO.	DESCRIPTION	U/M	QTY	MANUFACTURER	MANF'S P/N
1	09-5867-00	PCB MAIN VCO NAV 2000	EA	1.00		
C1	CB-1156-02	CAP TN 15UF 20V 5%	EA	1.00	KEMET	T110B156J020AS
					SPRAGUE	150D156X5020B2
C2	CL-5333-31	CAP SM .033UF 100V 5% X7R	EA	1.00	VITRAMON	VJ1206Y333JXBMT
C3	CL-4471-31	CAP SM 470PF 100V 5% COG	EA	1.00	KEMET	C1206C471J1GAC
C4	CL-4101-31	CAP SM 100PF 100V 5% COG	EA	8.00	VITRAMON	VJ1206A101JXBMT
C5	CM-2181-62	CAP RF 180PF 200V 10%	EA	1.00	ATC	ATC100B181KP200X
C6	CR-0024-00	CAP VR .5 TO 2.5PF 250V	EA	4.00	JOHANSON	9402-0
C7	CM-2301-62	CAP RF 300PF 200V 10%	EA	8.00	ATC	ATC100B301KP200X
C8	CL-4271-31	CAP SM 270PF 100V 5% COG	EA	6.00	VITRAMON	VJ1206A271JXBMT
C9	CM-2062-55	CAP RF 6.2PF 500V 10%	EA	1.00	ATC	ATC100B6R2KP500X
C10	CM-2075-55	CAP RF 7.5PF 500V 10%	EA	5.00	ATC	ATC100B7R5KP500X
C11	CM-2360-65	CAP RF 36PF 500V 10%	EA	1.00	ATC	ATC100B360KP500X
C12	CL-4101-31	CAP SM 100PF 100V 5% COG	EA	-		
C13	CL-4101-31	CAP SM 100PF 100V 5% COG	EA	-		
C14	CM-2301-62	CAP RF 300PF 200V 10%	EA	-		
C15	CR-0024-00	CAP VR .5 TO 2.5PF 250V	EA	-		
C16	CM-2301-62	CAP RF 300PF 200V 10%	EA	-		
C17	CL-4271-31	CAP SM 270PF 100V 5% COG	EA	-		
C18	CM-2075-55	CAP RF 7.5PF 500V 10%	EA	-		
C19	CM-2075-55	CAP RF 7.5PF 500V 10%	EA	-		
C20	CM-2240-65	CAP RF 24PF 500V 10%	EA	2.00	ATC	ATC100B240KP500X
C21	CL-4101-31	CAP SM 100PF 100V 5% COG	EA	-		
C22	CL-4101-31	CAP SM 100PF 100V 5% COG	EA	-		
C23	CM-2301-62	CAP RF 300PF 200V 10%	EA	-		
C24	CR-0024-00	CAP VR .5 TO 2.5PF 250V	EA	-		
C25	CM-2301-62	CAP RF 300PF 200V 10%	EA	-		
C26	CL-4271-31	CAP SM 270PF 100V 5% COG	EA	-		
C27	CM-2075-55	CAP RF 7.5PF 500V 10%	EA	-		
C28	CM-2075-55	CAP RF 7.5PF 500V 10%	EA	-		
C29	CM-2240-65	CAP RF 24PF 500V 10%	EA	-		
C30	CL-4101-31	CAP SM 100PF 100V 5% COG	EA	-		
C31	CL-4101-31	CAP SM 100PF 100V 5% COG	EA	-		
C32	CM-2301-62	CAP RF 300PF 200V 10%	EA	-		
C33	CR-0024-00	CAP VR .5 TO 2.5PF 250V	EA	-		
C34	CM-2301-62	CAP RF 300PF 200V 10%	EA	-		
C35	CL-4271-31	CAP SM 270PF 100V 5% COG	EA	-		
C36	CM-2091-55	CAP RF 9.1PF 500V 10%	EA	1.00	ATC	ATC100B9R1KP500X
C37	CM-2150-55	CAP RF 15PF 500V 10%	EA	1.00	ATC	ATC100B150KP500X
C38	CM-2390-55	CAP RF 39PF 500V 10%	EA	1.00	ATC	ATC100B390KP500X
C39	CL-4101-31	CAP SM 100PF 100V 5% COG	EA	-		
C40	CL-4271-31	CAP SM 270PF 100V 5% COG	EA	-		
C41	CL-5222-31	CAP SM 2200PF 100V 5% X7R	EA	1.00	KEMET	C1206C222J1RAC
C42	CL-5223-31	CAP SM .022UF 100V 5% X7R	EA	1.00	KEMET	C1206C223J1RAC
C43	CL-4271-31	CAP SM 270PF 100V 5% COG	EA	-		
C44	CL-4068-80	CAP SM 6.8PF 50V .25PF COG	EA	1.00	KEMET	C1206Q689C5GMC
C45	CM-2301-62	CAP RF 300PF 200V 10%	EA	-		
C46	CL-4056-01	CAP SM 5.6PF 100V +/-.5PF COG	EA	4.00	KEMET	C1206A5R6DXBMT
C47	CL-4056-01	CAP SM 5.6PF 100V +/-.5PF COG	EA	-		

JcAIR INC.

NAME: MAIN VCO BOARD NAV 2000 ASSY NO: 20-5867-00

REVISION: 02 DATE: 04/27/95

ITEM/ SYMBOL	JcAIR PART NO.	DESCRIPTION	U/M	QTY	MANUFACTURER	MANF'S P/N
C48	CL-4056-01	CAP SM 5.6PF 100V +/-.5PF COG	EA	-		
C49	CL-4056-01	CAP SM 5.6PF 100V +/-.5PF COG	EA	-		
CR1	07-4001-21	DIODE VAR SMV1400-21 15PF 10%	EA	4.00	ALPHA	SMV1400-21
CR2	07-4001-21	DIODE VAR SMV1400-21 15PF 10%	EA	-		
CR3	07-4001-21	DIODE VAR SMV1400-21 15PF 10%	EA	-		
CR4	07-4001-21	DIODE VAR SMV1400-21 15PF 10%	EA	-		
L1	19-2016-04	INDUCTOR MOLDED .33UH 780MA .20 OHM 10%	EA	8.00	DALE	IM-2 .33UH 10%
					DELEVAN	1025-08
					JW MILLER	9230-08
					MIL SPEC	MS75083-07
					NYTRONICS	MD-0.33
					VANGUARD	15451
L2	19-2016-02	INDUCTOR MOLDED .22UH 935MA .14 OHM 10%	EA	4.00	DALE	IM-2 .22UH 10%
					DELEVAN	1025-04
					JW MILLER	9230-04
					MIL SPEC	MS75083-05
					NYTRONICS	MD-0.22
					VANGUARD	15449
L3	19-2016-02	INDUCTOR MOLDED .22UH 935MA .14 OHM 10%	EA	-		
L4	19-2016-04	INDUCTOR MOLDED .33UH 780MA .20 OHM 10%	EA	-		
L5	19-2016-02	INDUCTOR MOLDED .22UH 935MA .14 OHM 10%	EA	-		
L6	19-2016-02	INDUCTOR MOLDED .22UH 935MA .14 OHM 10%	EA	-		
L7	19-2016-04	INDUCTOR MOLDED .33UH 780MA .20 OHM 10%	EA	-		
L8	19-2016-04	INDUCTOR MOLDED .33UH 780MA .20 OHM 10%	EA	-		
L9	19-2016-04	INDUCTOR MOLDED .33UH 780MA .20 OHM 10%	EA	-		
L10	19-2016-04	INDUCTOR MOLDED .33UH 780MA .20 OHM 10%	EA	-		
L11	19-2016-04	INDUCTOR MOLDED .33UH 780MA .20 OHM 10%	EA	-		
L12	19-2016-04	INDUCTOR MOLDED .33UH 780MA .20 OHM 10%	EA	-		
Q1	07-0019-00	XSTR FET MMBFJ310L AMPLF PKG=SOT-23 T=O	EA	4.00	MOTOROLA	MMBFJ310L
Q2	07-0159-00	XSTR NPN 2N3904 PKG=TO92	EA	4.00	GE	2N3904
					MOTOROLA	2N3904
Q3	07-0019-00	XSTR FET MMBFJ310L AMPLF PKG=SOT-23 T=O	EA	-		
Q4	07-0159-00	XSTR NPN 2N3904 PKG=TO92	EA	-		
Q5	07-0019-00	XSTR FET MMBFJ310L AMPLF PKG=SOT-23 T=O	EA	-		
Q6	07-0159-00	XSTR NPN 2N3904 PKG=TO92	EA	-		
Q7	07-0019-00	XSTR FET MMBFJ310L AMPLF PKG=SOT-23 T=O	EA	-		
Q8	07-0159-00	XSTR NPN 2N3904 PKG=TO92	EA	-		
Q9	07-0131-01	XSTR NPN BFR91 PKG=O TMP=O	EA	1.00	MOTOROLA	BFR91
R1	RE-0221-27	RES SM 220 EW 5%	EA	2.00	DALE	CRCW1206-221JB
R2	RE-0151-27	RES SM 150 EW 5%	EA	1.00	KOA SPEER	RM73B2B 151J
R3	RE-0751-27	RES SM 750 EW 5%	EA	2.00	KOA SPEER	RM73B2B 751J
R4	RE-0152-27	RES SM 1.5K EW 5%	EA	4.00	KOA SPEER	RM73B2B 152J
R5	RE-0680-27	RES SM 68 EW 5%	EA	6.00	KOA SPEER	RM73B2B 680J
R6	RE-0390-27	RES SM 39 EW 5%	EA	4.00	KOA SPEER	RM73B2BT 390J
R7	RE-0152-27	RES SM 1.5K EW 5%	EA	-		
R8	RE-0680-27	RES SM 68 EW 5%	EA	-		
R9	RE-0390-27	RES SM 39 EW 5%	EA	-		
R10	RE-0152-27	RES SM 1.5K EW 5%	EA	-		
R11	RE-0680-27	RES SM 68 EW 5%	EA	-		

JcAIR INC.

NAME: MAIN VCO BOARD NAV 2000 ASSY NO: 20-5867-00

REVISION: 02 DATE: 04/27/95

ITEM/ SYMBOL	JcAIR PART NO.	DESCRIPTION	U/M	QTY	MANUFACTURER	MANF'S P/N
R12	RE-0390-27	RES SM 39 EW 5%	EA	-		
R13	RE-0152-27	RES SM 1.5K EW 5%	EA	-		
R14	RE-0680-27	RES SM 68 EW 5%	EA	-		
R15	RE-0390-27	RES SM 39 EW 5%	EA	-		
R16	RE-0680-27	RES SM 68 EW 5%	EA	-		
R17	RE-0272-27	RES SM 2.7K EW 5%	EA	1.00	KOA SPEER	RM73B2BT 272J
R18	RE-0751-27	RES SM 750 EW 5%	EA	-		
R19	RE-0680-27	RES SM 68 EW 5%	EA	-		
R20	RE-0101-27	RES SM 100 EW 5%	EA	1.00	KOA SPEER	RM73B2B 101JT-X
R21	RE-0220-27	RES SM 22 EW 5%	EA	2.00	KOA SPEER	RM73B2BT 220J
R22	RE-0220-27	RES SM 22 EW 5%	EA	-		
R23	RE-0221-27	RES SM 220 EW 5%	EA	-		
T1	19-7133-00	TRANSFORMER BALUN SRFC MNT 6MHZ-600MHZ	EA	1.00	TOKO	458DB-1008
REF1	02-5867-00	SCHEMATIC MAIN VCO BD NAV 2000	EA	-		
REF2	25-5867-00	ASSY DWG MAIN VCO BD NAV 2000	EA	-		

REVISIONS			
REV	DESCRIPTION	DATE	APPROVED
1	ADD C45, RENAME R24 TO R23	05/93	
2	ADD NOTE 2	01/94	T JARBOE
3	ADD C46-C49	05/95	M HAJJAIR
4	ADD NOTE 3	07/97	S KIRK

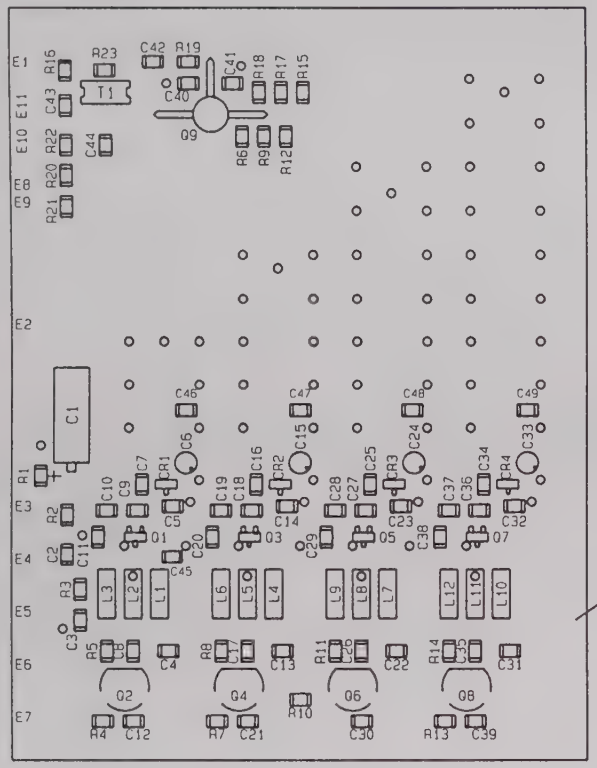

NOTES:

1. FOR COMPLETE ITEM DESCRIPTION REFERENCE BILL OF MATERIALS 20-5867-00.
2. INSTALL ALL CM CAPS ON THEIR SIDES.
3. C46-C49 NEED TO BE CLOSE TO C6, C15, C24 & C33.

		DIMENSIONS ARE IN INCHES TOLERANCES ARE. DECIMALS: FRACTIONS: ANGLES: XX ± .01 ± 1/64 ± 1/2 DEG XXX ± 005	BFGOODRICH AEROSPACE PROPRIETARY INFORMATION	BFGoodrich Aerospace JcAIA Test Systems	400 NEW CENTURY PARKWAY NEW CENTURY, KS 66031-0009 USA PHONE (913) 764-2452 FAX (913) 782-5104
			APPROVALS / DATE		
		MATERIAL FR4 .062 THK 1 OZ CU	DRAWN . NAH 04/92	ASSEMBLY MAIN VCO	
			CHECKED		
20-5867-00	NAV 2000				
NEXT ASS'Y	USED ON	FINISH NA	ISSUED	SIZE: A	CAGE NO.: 41364
UNIT: NAV 2000			FILE NAME: 5867.PCB	DWG NO.: 25-5867-00	REV.: 4 SHEET: 1 OF 1

REVISIONS			
REV	DESCRIPTION	DATE	APPROVED
2	ADD C45, CHANGE VALUE OF C5	05/93	DWH
3	ADD C46-C49	05/95	MOE
4	ADDED PART VALUE TO CR1-CR4	02/98	JE

+11.5VDC E1
GND E2
TUNING VOLTAGE E3
SEL1 E4
SEL2 E5
SEL3 E6
SEL4 E7

R1 220
C1 20V
R2 150
R3 750
C2 0.033uF
C3 470pF
L1 0.33uH
C4 100pF
C45 300pF
C5 180pF
CR1 SMV1400-21
C6 0.5-2.5pF
C7 300pF
C46 5.6pF
C8 270pF
L2 0.22uH
C9 6.2pF
Q1 MMBFJ310
C10 7.5pF
C11 36pF
R6 39
L3 0.22uH
R5 68
R4 1.5K
C12 100pF
Q2 2N3904

C17 270pF
L5 0.22uH
C18 7.5pF
CR2 SMV1400-21
L4 0.33uH
C13 100pF
C14 300pF
C16 300pF
C15 0.5-2.5pF
C47 5.6pF
Q3 MMBFJ310
C19 7.5pF
C20 24pF
R9 39
L6 0.22uH
R8 68
R7 1.5K
C21 100pF
Q4 2N3904

C26 270pF
L8 0.33uH
C27 7.5pF
CR3 SMV1400-21
L7 0.33uH
C22 100pF
C23 300pF
C25 300pF
C24 0.5-2.5pF
C48 5.6pF
Q5 MMBFJ310
C28 7.5pF
C29 24pF
R12 39
L9 0.33uH
R11 68
R10 1.5K
C30 100pF
Q6 2N3904

C35 270pF
L11 0.33uH
C36 9.1pF
CR4 SMV1400-21
L10 0.33uH
C31 100pF
C32 300pF
C34 300pF
C33 0.5-2.5pF
C49 5.6pF
Q7 MMBFJ310
C37 15pF
C38 39pF
R15 39
L12 0.33uH
R14 68
R13 1.5K
C39 100pF
Q8 2N3904

R16 68
C42 0.022pF
C43 270pF
T1
R23 220
C44 6.8pF
R20 100
R21 22
E8
E9
TO DIVIDER BUFFER
R17 2.7K
R18 750
Q9 BFR91
R22 22
E10
E11
TO OUTPUT BUFFER
C40 270pF
R19 68
C41 2200pF

		DIMENSIONS ARE IN INCHES TOLERANCES ARE DECIMALS: XX ±.01 XXX ±.005 FRACTIONS: ± 1/64 ANGLES ±1/2 DEG	BFGOODRICH AEROSPACE PROPRIETARY INFORMATION	BFGoodrich Aerospace JCAIR Test Systems	400 NEW CENTURY PARKWAY NEW CENTURY, KS 66031-0009 USA PHONE (913) 764-2452 FAX (913) 782-5104
		MATERIAL N/A	APPROVALS / DATE DRAWN NRH 11/92 CHECKED	MAIN VCO SYNTHESIZER MODULE	
20-5867-00	NAV 2000R	FINISH N/A	ISSUED	SIZE B · CAGE NO 41364 · DWG NO 02-5867-00 · REV 4 · SHEET 1 OF 1	
NEXT ASS'Y	USED ON		FILENAME 5867.SCH		
UNIT NAV 2000R					

JcAIR INC.

NAME: RF OUTPUT BOARD NAV 2000R ASSY NO: 20-5868-00

REVISION: 10 DATE: 02/16/2001

ITEM/ SYMBOL	JcAIR PART NO.	DESCRIPTION	U/M	QTY	MANUFACTURER	MANF'S P/N
1	09-5868-00	PCB RF OUTPUT NAV 2000R	EA	1.00	QMC	09-5868-00
2	13-0003-00	FERRITE BEAD RND .146 OD .050 ID .125 LG	EA	2.00	FAIR-RITE	2664000101
3	76-3502-03	CONNECTOR BLOCK, SYNTHESIZER MOD	EA	1.00	JCAIR	76-3502-03
4	47-2089-22	RF BD FENCE SYNTHESIZER MODULE NAV 2000R	EA	1.00	JCAIR	47-2089-22
5	24-4015-00	COAX RG-405	FT	1.00	MIL SPEC	M17/133-RG405
					UNIFORM TUBES	UT-85-M17
6	24-4002-00	COAX RG-188A/U	FT	1.00	ALPHA	9188A
					BELDEN	83269
					MIL SPEC	RG-188A/U
8	89-9903-01	SPACER FENCE NUT MODIFIED	EA	21.00	JCAIR	89-9903-01
9	47-2166-00	COVER 400MHZ LOOP NAV 2000R	EA	1.00	FOTOFAB	47-2166-00
10	47-2166-02	COVER MAIN LOOP NAV 2000R	EA	1.00	FOTOFAB	47-2166-02
11	90-0397-02	CONTACT STRIP COPPER .23 X 2FT TIN LEAD	EA	1.00	INSTRUMENT SPEC	0097-0550-07
12	90-0397-20	CONTACT STRIP COPPER .20 X 2FT TIN-PLTED	EA	1.00	INSTRUMENT SPEC	0097-0941-07
13	89-2214-04	SCREW PHS #4-40 X .250 NYLON	EA	1.00	HH SMITH	2520
AT1	12-8205-00	IC 002N2-32 MMIC FET ATT PKG=SOT-143 T=0	EA	1.00	ALPHA	AF002N2-32
C1	CG-0104-13	CAP MC .1UF 50V 10% X7R	EA	11.00	CENTRALAB	CW20C104K
C2	CB-0226-35	CAP TN 22UF 35V 10%	EA	8.00	KEMET	T354K226K035AS
C3	CH-0223-00	CAP CK .022UF 50V 10%	EA	2.00	MALLORY	CK05BX223K
C4	CD-3105-40	CAP MP 1UF 50V 5%	EA	4.00	MALLORY	168105J50G
C5	CD-3105-40	CAP MP 1UF 50V 5%	EA	-		
C6	CH-0223-00	CAP CK .022UF 50V 10%	EA	-		
C7	CD-3104-40	CAP MP .1UF 50V 5%	EA	3.00	MALLORY	168104J50A
					ROEDERSTEIN	MKT181310014
C8	CD-3104-40	CAP MP .1UF 50V 5%	EA	-		
C9	CG-0103-13	CAP MC .01UF 50V 10% X7R	EA	19.00	CENTRALAB	CW15C103K
C10	CG-0104-13	CAP MC .1UF 50V 10% X7R	EA	-		
C11	CB-0225-16	CAP TN 2.2UF 50V 20%	EA	1.00	KEMET	T350E225M050AS
					SPRAGUE	199D225X0050CA1
C12	CG-0102-13	CAP MC 1000PF 50V 10% X7R	EA	12.00	CENTRALAB	CW15C102K
C13	CG-0102-13	CAP MC 1000PF 50V 10% X7R	EA	-		
C14	CB-0336-21	CAP TN 33UF 10V 10%	EA	5.00	KEMET	T352F336K010AS
C15	CG-0103-13	CAP MC .01UF 50V 10% X7R	EA	-		
C16	CB-0336-21	CAP TN 33UF 10V 10%	EA	-		
C17	CG-0103-13	CAP MC .01UF 50V 10% X7R	EA	-		
C18	CG-0103-13	CAP MC .01UF 50V 10% X7R	EA	-		
C19	CB-0336-21	CAP TN 33UF 10V 10%	EA	-		
C20	CG-0104-13	CAP MC .1UF 50V 10% X7R	EA	-		
C21	CB-0226-35	CAP TN 22UF 35V 10%	EA	-		
C22	CG-0103-13	CAP MC .01UF 50V 10% X7R	EA	-		
C23	CG-0104-13	CAP MC .1UF 50V 10% X7R	EA	-		
C24	CG-0330-11	CAP MC 33PF 100V 10% COG	EA	5.00	CENTRALAB	CN15A330K
C25	CG-0330-11	CAP MC 33PF 100V 10% COG	EA	-		
C26	CG-0330-11	CAP MC 33PF 100V 10% COG	EA	-		
C27	CL-5223-40	CAP SM .022UF 50V 10% X7R	EA	8.00	KEMET	C1206C223K5RAC
C28	CL-4271-30	CAP SM 270PF 50V 5% COG	EA	16.00	KEMET	C1206C271J5GAC
C29	CL-4271-30	CAP SM 270PF 50V 5% COG	EA	-		
C30	CL-5223-40	CAP SM .022UF 50V 10% X7R	EA	-		
C31	CL-5223-40	CAP SM .022UF 50V 10% X7R	EA	-		

JcAIR INC.

NAME: RF OUTPUT BOARD NAV 2000R ASSY NO: 20-5868-00

REVISION: 10 DATE: 02/16/2001

ITEM/ SYMBOL	JcAIR PART NO.	DESCRIPTION	U/M	QTY	MANUFACTURER	MANF'S P/N
C32	CL-4271-30	CAP SM 270PF 50V 5% COG	EA	-		
C33	CL-4390-30	CAP SM 39PF 50V 5% COG	EA	2.00	KEMET	C1206C390J5GAC
C34	CL-4271-30	CAP SM 270PF 50V 5% COG	EA	-		
C35	CL-5222-51	CAP SM 2200PF 100V 20% X7R	EA	6.00	KEMET	C1206C222M1RAC
C36	CL-4056-01	CAP SM 5.6PF 100V +/-.5PF COG	EA	6.00	KEMET	C1206A5R6DXBMT
C37	CB-0105-35	CAP TN 1UF 35V 20%	EA	4.00	KEMET	T354A105M035AS
C38	CL-4271-30	CAP SM 270PF 50V 5% COG	EA	-		
C39	CL-5222-51	CAP SM 2200PF 100V 20% X7R	EA	-		
C40	CL-4056-01	CAP SM 5.6PF 100V +/-.5PF COG	EA	-		
C41	CB-0226-35	CAP TN 22UF 35V 10%	EA	-		
C42	CL-4271-30	CAP SM 270PF 50V 5% COG	EA	-		
C43	CL-4271-30	CAP SM 270PF 50V 5% COG	EA	-		
C44	CL-5223-40	CAP SM .022UF 50V 10% X7R	EA	-		
C45	CL-4056-01	CAP SM 5.6PF 100V +/-.5PF COG	EA	-		
C46	CL-4100-30	CAP SM 10PF 50V 5% COG	EA	1.00	KEMET	C1206C100J5GAC
C47	CL-4271-30	CAP SM 270PF 50V 5% COG	EA	-		
C48	CL-5222-51	CAP SM 2200PF 100V 20% X7R	EA	-		
C49	CB-0226-35	CAP TN 22UF 35V 10%	EA	-		
C50	CG-0103-13	CAP MC .01UF 50V 10% X7R	EA	-		
C51	CB-0226-35	CAP TN 22UF 35V 10%	EA	-		
C52	CG-0104-13	CAP MC .1UF 50V 10% X7R	EA	-		
C53	CB-0336-21	CAP TN 33UF 10V 10%	EA	-		
C54	CD-3105-40	CAP MP 1UF 50V 5%	EA	-		
C55	CG-0104-13	CAP MC .1UF 50V 10% X7R	EA	-		
C56	CB-0226-35	CAP TN 22UF 35V 10%	EA	-		
C57	CH-0471-10	CAP CK 470PF 100V 10%	EA	1.00		
C58	CD-3105-40	CAP MP 1UF 50V 5%	EA	-		
C59	CG-0103-13	CAP MC .01UF 50V 10% X7R	EA	-		
C60	CB-0336-21	CAP TN 33UF 10V 10%	EA	-		
C61	CG-0103-13	CAP MC .01UF 50V 10% X7R	EA	-		
C62	CG-0102-13	CAP MC 1000PF 50V 10% X7R	EA	-		
C63	CG-0102-13	CAP MC 1000PF 50V 10% X7R	EA	-		
C64	CG-0103-13	CAP MC .01UF 50V 10% X7R	EA	-		
C65	CL-4271-30	CAP SM 270PF 50V 5% COG	EA	-		
C66	CL-5223-40	CAP SM .022UF 50V 10% X7R	EA	-		
C67	CL-4271-30	CAP SM 270PF 50V 5% COG	EA	-		
C68	CB-0226-35	CAP TN 22UF 35V 10%	EA	-		
C69	CL-4390-30	CAP SM 39PF 50V 5% COG	EA	-		
C70	CL-4056-01	CAP SM 5.6PF 100V +/-.5PF COG	EA	-		
C71	CL-4271-30	CAP SM 270PF 50V 5% COG	EA	-		
C72	CL-5222-51	CAP SM 2200PF 100V 20% X7R	EA	-		
C73	CL-4271-30	CAP SM 270PF 50V 5% COG	EA	-		
C74	CL-5223-40	CAP SM .022UF 50V 10% X7R	EA	-		
C75	CL-4271-30	CAP SM 270PF 50V 5% COG	EA	-		
C76	CL-5223-40	CAP SM .022UF 50V 10% X7R	EA	-		
C77	CL-4068-01	CAP SM 6.8PF 100V +/-.5PF COG	EA	1.00	VITRAMON	VJ1206A6R8DXBMB
C78	CL-4271-30	CAP SM 270PF 50V 5% COG	EA	-		
C79	CL-5222-51	CAP SM 2200PF 100V 20% X7R	EA	-		
C80	CL-4056-01	CAP SM 5.6PF 100V +/-.5PF COG	EA	-		

NAME: RF OUTPUT BOARD NAV 2000R ASSY NO: 20-5868-00

REVISION: 10 DATE: 02/16/2001

ITEM/ SYMBOL	JcAIR PART NO.	DESCRIPTION	U/M	QTY	MANUFACTURER	MANF'S P/N
C81	CL-5104-41	CAP SM .1UF 100V +/-10% X7R	EA	4.00	VITRAMON	VJ1206Y104KXBMB
C82	CG-0104-13	CAP MC .1UF 50V 10% X7R	EA	-		
C83	CG-0103-13	CAP MC .01UF 50V 10% X7R	EA	-		
C84	CB-0105-35	CAP TN 1UF 35V 20%	EA	-		
C85	CG-0104-13	CAP MC .1UF 50V 10% X7R	EA	-		
C86	CG-0680-12	CAP MC 68PF 200V 10% COG	EA	3.00	KEMET	C315C680K2G5CA
C87	CG-0121-12	CAP MC 120PF 200V 10% COG	EA	2.00	KEMET	C315C121K2G5CA
C88	CG-0121-12	CAP MC 120PF 200V 10% COG	EA	-		
C89	CG-0680-12	CAP MC 68PF 200V 10% COG	EA	-		
C90	CG-0103-13	CAP MC .01UF 50V 10% X7R	EA	-		
C91	CL-4681-30	CAP SM 680PF 50C 5% COG	EA	4.00	KEMET	C1206C681J5GAC
C92	CL-4331-30	CAP SM 330PF 50V 5% COG	EA	3.00	KEMET	C1206C331J5GAC
C93	CL-4331-30	CAP SM 330PF 50V 5% COG	EA	-		
C94	CL-4331-30	CAP SM 330PF 50V 5% COG	EA	-		
C95	CG-0331-11	CAP MC 330PF 100V 10% COG	EA	3.00	KEMET	C315C331K1G5CA
C96	CL-4681-30	CAP SM 680PF 50C 5% COG	EA	-		
C97	CL-4681-30	CAP SM 680PF 50C 5% COG	EA	-		
C98	CG-0331-11	CAP MC 330PF 100V 10% COG	EA	-		
C99	CL-4681-30	CAP SM 680PF 50C 5% COG	EA	-		
C100	CL-5104-40	CAP SM .1UF 50V 10% X7R	EA	1.00	KEMET	C1206C104K5RAC
					VITRAMON	VJ1206Y104JXAMT
C101	CL-4471-30	CAP SM 470PF 50V 5% COG	EA	10.00	KEMET	C1206C471J5GAC
C102	CL-4471-30	CAP SM 470PF 50V 5% COG	EA	-		
C103	CG-0471-11	CAP MC 470PF 100V 10% COG	EA	1.00	KEMET	C315C471K1G5CA
C104	CL-4471-30	CAP SM 470PF 50V 5% COG	EA	-		
C105	CL-4150-30	CAP SM 15PF 50V 5% COG	EA	1.00	KEMET	C1206C150J5GAC
C106	CL-4012-81	CAP SM 1.2PF 100V +/- .25PF COG	EA	2.00	VITRAMON	VJ1206A1R2CXBMB
C107	CL-4220-30	CAP SM 22PF 50V 5% COG	EA	2.00	KEMET	C1206C220J5GAC
C108	CL-4047-01	CAP SM 4.7PF 100V +/-.5PF COG	EA	3.00	VITRAMON	VJ1206A4R7DXBMT
C109	CL-4120-01	CAP SM 12PF 100V +/-.5PF COG	EA	1.00	VITRAMON	VJ1206A120DXBMB
C110	CL-4471-30	CAP SM 470PF 50V 5% COG	EA	-		
C111	CL-4471-30	CAP SM 470PF 50V 5% COG	EA	-		
C112	CL-4471-30	CAP SM 470PF 50V 5% COG	EA	-		
C113	CL-4220-30	CAP SM 22PF 50V 5% COG	EA	-		
C114	CL-4033-80	CAP SM 3.3PF 50V +/-.25PF COG	EA	1.00	VITRAMON	VJ1206A3R3CXBMB
C115	CL-4330-30	CAP SM 33PF 50V 5% COG	EA	1.00	KEMET	C1206C330J5GAC
C116	CL-4082-01	CAP SM 8.2PF 100V +/-.5PF COG	EA	2.00	VITRAMON	VJ1206A8R2DXBMB
C117	CL-4180-30	CAP SM 18PF 50V 5% COG	EA	1.00	KEMET	C1206C180JGAC
C118	CG-0102-13	CAP MC 1000PF 50V 10% X7R	EA	-		
C119	CG-0102-13	CAP MC 1000PF 50V 10% X7R	EA	-		
C120	CG-0102-13	CAP MC 1000PF 50V 10% X7R	EA	-		
C121	CG-0102-13	CAP MC 1000PF 50V 10% X7R	EA	-		
C122	CG-0330-11	CAP MC 33PF 100V 10% COG	EA	-		
C123	CG-0068-02	CAP MC 6.8PF 200V 5% COG	EA	1.00	KEMET	C315C689J2G5CA
C124	CG-0470-11	CAP MC 47PF 100V 10% COG	EA	2.00	CENTRALAB	CN15A470K
C125	CG-0270-11	CAP MC 27PF 100V 10% COG	EA	3.00	KEMET	C315C270K1G5CA
C126	CG-0270-11	CAP MC 27PF 100V 10% COG	EA	-		
C127	CG-0102-13	CAP MC 1000PF 50V 10% X7R	EA	-		

NAME: RF OUTPUT BOARD NAV 2000R ASSY NO: 20-5868-00

REVISION: 10 DATE: 02/16/2001

ITEM/ SYMBOL	JcAIR PART NO.	DESCRIPTION	U/M	QTY	MANUFACTURER	MANF'S P/N
C128	CG-0102-13	CAP MC 1000PF 50V 10% X7R	EA	-		
C129	CG-0102-13	CAP MC 1000PF 50V 10% X7R	EA	-		
C130	CG-0470-11	CAP MC 47PF 100V 10% COG	EA	-		
C131	CG-0082-02	CAP MC 8.2PF 200V 5% COG	EA	1.00	KEMET	C315C829J2G5CA
C132	CG-0680-12	CAP MC 68PF 200V 10% COG	EA	-		
C133	CG-0270-11	CAP MC 27PF 100V 10% COG	EA	-		
C134	CG-0330-11	CAP MC 33PF 100V 10% COG	EA	-		
C135	CG-0221-11	CAP MC 220PF 100V 10% COG	EA	9.00	CENTRALAB	CN15A221K
					KEMET	C315C221K1G5CA
C136	CL-4221-30	CAP SM 220PF 50V 5% COG	EA	7.00	KEMET	C1206C221J5GAC
C137	CL-4221-30	CAP SM 220PF 50V 5% COG	EA	-		
C138	CL-4221-30	CAP SM 220PF 50V 5% COG	EA	-		
C139	CL-4100-01	CAP SM 10PF 100V +/-.5PF COG	EA	3.00	VITRAMON	VJ1206A100DXBMT
C140	CL-4012-81	CAP SM 1.2PF 100V +/- .25PF COG	EA	-		
C141	CL-4027-80	CAP SM 2.7PF 50V +/-.25PF COG	EA	1.00	VITRAMON	VJ1206A2R7CXBMB
C142	CL-4150-31	CAP SM 15PF 100V 5% COG	EA	1.00	VITRAMON	VJ1206A150JXBMT
C143	CL-4082-01	CAP SM 8.2PF 100V +/-.5PF COG	EA	-		
C144	CL-4221-30	CAP SM 220PF 50V 5% COG	EA	-		
C145	CL-4221-30	CAP SM 220PF 50V 5% COG	EA	-		
C146	CL-4221-30	CAP SM 220PF 50V 5% COG	EA	-		
C147	CL-5104-41	CAP SM .1UF 100V +/-10% X7R	EA	-		
C148	CB-0105-35	CAP TN 1UF 35V 20%	EA	-		
C149	CB-0685-35	CAP TN 6.8UF 35V 10%	EA	2.00	KEMET	T354F685K035AS
C150	CH-0104-00	CAP CK .1UF 50V 10%	EA	3.00	KEMET	C052K104K5X5CA
					MALLORY	CK05BX104K
					MIL SPEC	M39014/01-1473
					MIL SPEC	M39014/01-1553V
					SPRAGUE	CK05BX104K
C151	CG-0221-11	CAP MC 220PF 100V 10% COG	EA	-		
C152	CL-4221-30	CAP SM 220PF 50V 5% COG	EA	-		
C153	CL-4047-01	CAP SM 4.7PF 100V +/-.5PF COG	EA	-		
C154	CL-4100-01	CAP SM 10PF 100V +/-.5PF COG	EA	-		
C155	CL-4100-01	CAP SM 10PF 100V +/-.5PF COG	EA	-		
C156	CL-4047-01	CAP SM 4.7PF 100V +/-.5PF COG	EA	-		
C158	CL-5104-41	CAP SM .1UF 100V +/-10% X7R	EA	-		
C159	CG-0221-11	CAP MC 220PF 100V 10% COG	EA	-		
C162	CL-5104-41	CAP SM .1UF 100V +/-10% X7R	EA	-		
C163	CD-3473-48	CAP MP .047UF 63V 5%	EA	1.00	MALLORY	168473J63A
C164	CD-3104-40	CAP MP .1UF 50V 5%	EA	-		
C165	CH-0104-00	CAP CK .1UF 50V 10%	EA	-		
C166	CG-0221-11	CAP MC 220PF 100V 10% COG	EA	-		
C167	CG-0221-11	CAP MC 220PF 100V 10% COG	EA	-		

NAME: RF OUTPUT BOARD NAV 2000R ASSY NO: 20-5868-00

REVISION: 10 DATE: 02/16/2001

ITEM/ SYMBOL	JcAIR PART NO.	DESCRIPTION	U/M	QTY	MANUFACTURER	MANF'S P/N
C168	CH-0104-00	CAP CK .1UF 50V 10%	EA	-		
C169	CG-0221-11	CAP MC 220PF 100V 10% COG	EA	-		
C170	CG-0103-13	CAP MC .01UF 50V 10% X7R	EA	-		
C171	CG-0104-13	CAP MC .1UF 50V 10% X7R	EA	-		
C172	CB-0476-35	CAP TN 47UF 35V 10%	EA	2.00	KEMET	T354M476K035AS
C173	CB-0226-35	CAP TN 22UF 35V 10%	EA	-		
C174	CB-0107-23	CAP TN 100UF 20V 10%	EA	1.00	KEMET	T353M107K020AS
C175	CB-0476-35	CAP TN 47UF 35V 10%	EA	-		
C176	CB-0106-26	CAP TN 10UF 50V 20%	EA	1.00	SPRAGUE	199D106X005OFE2
C177	CG-0103-13	CAP MC .01UF 50V 10% X7R	EA	-		
C178	CG-0103-13	CAP MC .01UF 50V 10% X7R	EA	-		
C179	CG-0103-13	CAP MC .01UF 50V 10% X7R	EA	-		
C180	CG-0103-13	CAP MC .01UF 50V 10% X7R	EA	-		
C181	CG-0103-13	CAP MC .01UF 50V 10% X7R	EA	-		
C182	CL-5223-40	CAP SM .022UF 50V 10% X7R	EA	-		
C183	CL-4271-30	CAP SM 270PF 50V 5% COG	EA	-		
C184	CL-4056-01	CAP SM 5.6PF 100V +/-.5PF COG	EA	-		
C185	CB-0475-21	CAP TN 4.7UF 10V 10%	EA	1.00	KEMET	T353A475K010AS
C186	CL-4271-30	CAP SM 270PF 50V 5% COG	EA	-		
C187	CL-5222-51	CAP SM 2200PF 100V 20% X7R	EA	-		
C188	CB-0685-35	CAP TN 6.8UF 35V 10%	EA	-		
C189	CG-0103-13	CAP MC .01UF 50V 10% X7R	EA	-		
C190	CG-0103-13	CAP MC .01UF 50V 10% X7R	EA	-		
C191	CG-0331-11	CAP MC 330PF 100V 10% COG	EA	-		
C192	CG-0221-11	CAP MC 220PF 100V 10% COG	EA	-		
C193	CG-0221-11	CAP MC 220PF 100V 10% COG	EA	-		
C194	CG-0221-11	CAP MC 220PF 100V 10% COG	EA	-		
C195	CG-0104-13	CAP MC .1UF 50V 10% X7R	EA	-		
C196	CG-0104-13	CAP MC .1UF 50V 10% X7R	EA	-		
C197	CB-0105-35	CAP TN 1UF 35V 20%	EA	-		
C198	CH-0471-20	CAP CK 470PF 200V 10%	EA	1.00	MALLORY	CK05BX471K
					MIL SPEC	M39014/01-1311
					SPRAGUE	CK05BX471K
C199	CG-0102-13	CAP MC 1000PF 50V 10% X7R	EA	-		
C201	CL-5103-30	CAP SM .01UF 50V 5% X7R	EA	4.00	KEMET	C1206C103J5RAC
C202	CL-5103-30	CAP SM .01UF 50V 5% X7R	EA	-		
C203	CL-5103-30	CAP SM .01UF 50V 5% X7R	EA	-		
C204	CL-5103-30	CAP SM .01UF 50V 5% X7R	EA	-		
C205	CL-4471-30	CAP SM 470PF 50V 5% COG	EA	-		
C206	CL-4471-30	CAP SM 470PF 50V 5% COG	EA	-		
C207	CL-4471-30	CAP SM 470PF 50V 5% COG	EA	-		
C208	CL-4471-30	CAP SM 470PF 50V 5% COG	EA	-		
C209	CB-1225-03	CAP TN 2.2UF 20V 10%	EA	1.00	KEMET	T110A225K020AS
					MIL SPEC	M39003/01-2283
					MIL SPEC	M39003/01-2763
CR1	07-6138-01	DIODE PIN MA4SW201 SPDT PKG=SO-8	EA	7.00	M/A COM	MA4SW201
CR2	07-6138-01	DIODE PIN MA4SW201 SPDT PKG=SO-8	EA	-		
CR3	07-6138-01	DIODE PIN MA4SW201 SPDT PKG=SO-8	EA	-		
CR4	07-6138-01	DIODE PIN MA4SW201 SPDT PKG=SO-8	EA	-		

NAME: RF OUTPUT BOARD NAV 2000R ASSY NO: 20-5868-00

REVISION: 10 DATE: 02/16/2001

ITEM/ SYMBOL	JcAIR PART NO.	DESCRIPTION	U/M	QTY	MANUFACTURER	MANF'S P/N
CR5	07-6138-01	DIODE PIN MA4SW201 SPDT PKG=SO-8	EA	-		
CR6	07-6138-01	DIODE PIN MA4SW201 SPDT PKG=SO-8	EA	-		
CR7	07-6137-00	DIODE SIL MPN3700 PKG=TO92	EA	3.00	MOTOROLA	MPN3700
CR10	07-6021-00	DIODE 1N5711	EA	2.00	HP	1N5711
CR11	07-6021-00	DIODE 1N5711	EA	-		
CR12	07-6137-00	DIODE SIL MPN3700 PKG=TO92	EA	-		
CR13	07-6137-00	DIODE SIL MPN3700 PKG=TO92	EA	-		
CR14	07-6032-00	DIODE SIL 1N914 PKG=O TMP=O	EA	2.00	MICRO SEMI	1N914
CR15	07-6032-00	DIODE SIL 1N914 PKG=O TMP=O	EA	-		
CR16	07-6138-01	DIODE PIN MA4SW201 SPDT PKG=SO-8	EA	-		
CR17	07-5083-10	DIODE ZEN 1N4688 PKG=DO-204AH T=O V=4.7	EA	1.00	MOTOROLA	1N4688
CR18	07-6016-00	DIODE SIL 1N4148 PKG=DO35	EA	2.00	MOTOROLA	1N4148
CR19	07-6016-00	DIODE SIL 1N4148 PKG=DO35	EA	-		
FL1	17-0020-01	FILTER LOW PASS 570 MHZ	EA	1.00	MINI-CIRCUITS	PLP-550
J1	30-2063-46	CONN POST HEADER DBL ROW .100CL 46 PIN	EA	1.00	AMP	2-103240-3
J2	30-2063-04	CONN POST HEADER DBL ROW .100CL 4 PIN	EA	1.00	AMP	103186-2
J3	30-0204-05	CONN SMB RCPT RT ANG MALE PC MNT	EA	1.00	APPLIED ENG PRO	2110-1511-000
L1	19-2153-03	INDUCTOR MOLDED 10UH .44A .605 OHM 10%	EA	4.00	DALE	IM-6 10UH 10%
					MIL SPEC	MS75101-7
L2	19-2153-03	INDUCTOR MOLDED 10UH .44A .605 OHM 10%	EA	-		
L3	19-2153-03	INDUCTOR MOLDED 10UH .44A .605 OHM 10%	EA	-		
L4	19-2153-03	INDUCTOR MOLDED 10UH .44A .605 OHM 10%	EA	-		
L5	19-2016-31	INDUCTOR MOLDED 56UH 145MA 5.7 OHM 10%	EA	4.00	DALE	IM-2 56UH 10%
					DELEVAN	1025-62
					JW MILLER	9230-62
					MIL SPEC	MS75085-04
					NYTRONICS	MD-56.0
					VANGUARD	15478
L6	19-2016-31	INDUCTOR MOLDED 56UH 145MA 5.7 OHM 10%	EA	-		
L7	19-2016-31	INDUCTOR MOLDED 56UH 145MA 5.7 OHM 10%	EA	-		
L8	19-2016-34	INDUCTOR MOLDED 100UH 125MA 8.0 OHM 10%	EA	1.00	DALE	IM-2 100UH 10%
					DELEVAN	1025-68
					JW MILLER	9230-68
					MIL SPEC	MS75085-07
					NYTRONICS	MD-100
					VANGUARD	15481
L9	19-2181-14	INDUCTOR MOLDED .14UH Q=100 @100MHZ 4.5T	EA	3.00	TOKO	E526HNA-100297
L10	19-2181-14	INDUCTOR MOLDED .14UH Q=100 @100MHZ 4.5T	EA	-		
L11	19-2181-14	INDUCTOR MOLDED .14UH Q=100 @100MHZ 4.5T	EA	-		
L12	19-2016-11	INDUCTOR MOLDED 1.2UH 825MA .18 OHM 10%	EA	5.00	DELEVAN	1025-22
					JW MILLER	9230-22
					MIL SPEC	MS75084-01
					NYTRONICS	MD-1.20
					VANGUARD	15458

NAME: RF OUTPUT BOARD NAV 2000R ASSY NO: 20-5868-00

REVISION: 10 DATE: 02/16/2001

ITEM/ SYMBOL	JcAIR PART NO.	DESCRIPTION	U/M	QTY	MANUFACTURER	MANF'S P/N
L13	19-2016-11	INDUCTOR MOLDED 1.2UH 825MA .18 OHM 10%	EA	-		
L14	19-2000-35	INDUCTOR SPRING 35.5NH Q=112 9T 5%	EA	2.00	COILCRAFT	B09T
L15	19-2000-22	INDUCTOR SPRING 22NH Q=102 7T 5%	EA	3.00	COILCRAFT	B07T
L16	19-2016-11	INDUCTOR MOLDED 1.2UH 825MA .18 OHM 10%	EA	-		
L17	19-2016-11	INDUCTOR MOLDED 1.2UH 825MA .18 OHM 10%	EA	-		
L18	19-2016-11	INDUCTOR MOLDED 1.2UH 825MA .18 OHM 10%	EA	-		
L19	19-2000-43	INDUCTOR SPRING 43NH Q=106 10T 5%	EA	1.00	COILCRAFT	B10T
L20	19-2000-35	INDUCTOR SPRING 35.5NH Q=112 9T 5%	EA	-		
L21	19-2016-16	INDUCTOR MOLDED 3.3UH 380MA .85 OHM 10%	EA	3.00	DELEVAN	1025-32
					JW MILLER	9230-32
					MIL SPEC	MS75084-06
					NYTRONICS	MD-3.30
					VANGUARD	15463
L22	19-2016-16	INDUCTOR MOLDED 3.3UH 380MA .85 OHM 10%	EA	-		
L23	19-2016-16	INDUCTOR MOLDED 3.3UH 380MA .85 OHM 10%	EA	-		
L24	19-2181-06	INDUCTOR MOLDED .06UH Q=90 @ 100MHZ 2.5T	EA	2.00	TOKO	E526HNA-100295
L25	19-2181-04	INDUCTOR MOLDED .04UH Q=80 @ 100MHZ 1.5T	EA	1.00	TOKO	E526HNA-100294
L26	19-2016-18	INDUCTOR MOLDED 4.7UH 320MA 1.2 OHM 10%	EA	2.00	DALE	IM-2 4.7 10%
					DELEVAN	1025-36
					JW MILLER	9230-36
					MIL SPEC	MS75084-08
					NYTRONICS	MD-4.70
					VANGUARD	15465
L27	19-2016-18	INDUCTOR MOLDED 4.7UH 320MA 1.2 OHM 10%	EA	-		
L28	19-2181-09	INDUCTOR MOLDED .09UH Q=100 @100MHZ 3.5T	EA	1.00	TOKO	E526HNA-100296
L29	19-2181-06	INDUCTOR MOLDED .06UH Q=90 @ 100MHZ 2.5T	EA	-		
L31	19-2016-06	INDUCTOR MOLDED .47UH 590MA .35 OHM 10%	EA	3.00	DELEVAN	1025-12
					JW MILLER	9230-12
					MIL SPEC	MS75083-09
					NYTRONICS	MD-0.47
					VANGUARD	15453
L32	19-2016-06	INDUCTOR MOLDED .47UH 590MA .35 OHM 10%	EA	-		
L33	19-2016-06	INDUCTOR MOLDED .47UH 590MA .35 OHM 10%	EA	-		
L34	19-2000-22	INDUCTOR SPRING 22NH Q=102 7T 5%	EA	-		
L35	19-2000-17	INDUCTOR SPRING 17.5NH Q=100 6T 5%	EA	3.00	COILCRAFT	B06T
L37	19-2016-04	INDUCTOR MOLDED .33UH 780MA .20 OHM 10%	EA	3.00	DALE	IM-2 .33UH 10%
					DELEVAN	1025-08
					JW MILLER	9230-08
					MIL SPEC	MS75083-07
					NYTRONICS	MD-0.33
					VANGUARD	15451
L38	19-2016-04	INDUCTOR MOLDED .33UH 780MA .20 OHM 10%	EA	-		
L40	19-2000-17	INDUCTOR SPRING 17.5NH Q=100 6T 5%	EA	-		
L41	19-2000-22	INDUCTOR SPRING 22NH Q=102 7T 5%	EA	-		
L42	19-2000-17	INDUCTOR SPRING 17.5NH Q=100 6T 5%	EA	-		

NAME: RF OUTPUT BOARD NAV 2000R ASSY NO: 20-5868-00

REVISION: 10 DATE: 02/16/2001

ITEM/ SYMBOL	JcAIR PART NO.	DESCRIPTION	U/M	QTY	MANUFACTURER	MANF'S P/N
L44	19-2016-42	INDUCTOR MOLDED 470UH 50MA 42 OHM 10%	EA	1.00	DALE	IM-2 470UH 10%
					DELEVAN	1025-84
					JW MILLER	9230-84
					MIL SPEC	MS75085-15
					NYTRONICS	MD-470
					VANGUARD	15489
L45	19-2016-04	INDUCTOR MOLDED .33UH 780MA .20 OHM 10%	EA	-		
L46	19-2016-31	INDUCTOR MOLDED 56UH 145MA 5.7 OHM 10%	EA	-		
MX1	18-3013-00	FREQUENCY MIXER 1-500 MHZ	EA	1.00	MINI-CIRCUITS	SBL-1
Q1	07-1003-00	XSTR SM 901 NPN SIL PKG=SOT23	EA	6.00	MOTOROLA	MMBR901LT1
Q2	07-1003-00	XSTR SM 901 NPN SIL PKG=SOT23	EA	-		
Q3	07-1003-00	XSTR SM 901 NPN SIL PKG=SOT23	EA	-		
Q4	07-1003-00	XSTR SM 901 NPN SIL PKG=SOT23	EA	-		
Q5	07-1003-00	XSTR SM 901 NPN SIL PKG=SOT23	EA	-		
Q6	07-0159-00	XSTR NPN 2N3904 PKG=TO92	EA	15.00	GE	2N3904
					MOTOROLA	2N3904
Q7	07-0159-00	XSTR NPN 2N3904 PKG=TO92	EA	-		
Q8	07-0223-00	XSTR PNP 2N3906 PKG=TO92 TMP=M	EA	12.00	MOTOROLA	2N3906
Q9	07-0223-00	XSTR PNP 2N3906 PKG=TO92 TMP=M	EA	-		
Q10	07-0159-00	XSTR NPN 2N3904 PKG=TO92	EA	-		
Q11	07-0223-00	XSTR PNP 2N3906 PKG=TO92 TMP=M	EA	-		
Q12	07-0159-00	XSTR NPN 2N3904 PKG=TO92	EA	-		
Q13	07-0223-00	XSTR PNP 2N3906 PKG=TO92 TMP=M	EA	-		
Q14	07-0159-00	XSTR NPN 2N3904 PKG=TO92	EA	-		
Q15	07-0223-00	XSTR PNP 2N3906 PKG=TO92 TMP=M	EA	-		
Q16	07-0159-00	XSTR NPN 2N3904 PKG=TO92	EA	-		
Q17	07-0223-00	XSTR PNP 2N3906 PKG=TO92 TMP=M	EA	-		
Q18	07-0159-00	XSTR NPN 2N3904 PKG=TO92	EA	-		
Q19	07-0223-00	XSTR PNP 2N3906 PKG=TO92 TMP=M	EA	-		
Q20	07-0159-00	XSTR NPN 2N3904 PKG=TO92	EA	-		
Q21	07-0223-00	XSTR PNP 2N3906 PKG=TO92 TMP=M	EA	-		
Q22	07-0223-00	XSTR PNP 2N3906 PKG=TO92 TMP=M	EA	-		
Q23	07-0159-00	XSTR NPN 2N3904 PKG=TO92	EA	-		
Q24	07-0159-00	XSTR NPN 2N3904 PKG=TO92	EA	-		
Q25	07-0223-00	XSTR PNP 2N3906 PKG=TO92 TMP=M	EA	-		
Q26	07-1003-00	XSTR SM 901 NPN SIL PKG=SOT23	EA	-		
Q27	07-0159-00	XSTR NPN 2N3904 PKG=TO92	EA	-		
Q28	07-0159-00	XSTR NPN 2N3904 PKG=TO92	EA	-		
Q29	07-0159-00	XSTR NPN 2N3904 PKG=TO92	EA	-		
Q30	07-0223-00	XSTR PNP 2N3906 PKG=TO92 TMP=M	EA	-		
Q31	07-0159-00	XSTR NPN 2N3904 PKG=TO92	EA	-		
Q32	07-0223-00	XSTR PNP 2N3906 PKG=TO92 TMP=M	EA	-		
Q33	07-0159-00	XSTR NPN 2N3904 PKG=TO92	EA	-		
R1	RC-1241-12	RES MF 1.24K EW 1%	EA	1.00	DALE	CMF-55 1241FT-1
					MIL SPEC	RN-55D 1241F
R2	RC-2372-12	RES MF 23.7K EW 1%	EA	1.00	DALE	CMF-55 2372FT-1
					MIL SPEC	RN-55D 2372F

NAME: RF OUTPUT BOARD NAV 2000R

ASSY NO: 20-5868-00

REVISION: 10

DATE: 02/16/2001

ITEM/ SYMBOL	JcAIR PART NO.	DESCRIPTION	U/M	QTY	MANUFACTURER	MANF'S P/N
R3	RC-2051-12	RES MF 2.05K EW 1%	EA	2.00	DALE	CMF-55 2051FT-1
					MIL SPEC	RN-55D 2051F
R4	RC-2051-12	RES MF 2.05K EW 1%	EA	-		
R5	RC-2001-12	RES MF 2K EW 1%	EA	6.00	DALE	CMF-55 2001FT-1
					MIL SPEC	RN-55D 2001F
R6	RC-2001-12	RES MF 2K EW 1%	EA	-		
R7	RC-2001-12	RES MF 2K EW 1%	EA	-		
R8	RC-2001-12	RES MF 2K EW 1%	EA	-		
R11	RA-0560-23	RES CC 56 QW 5%	EA	2.00	ALLEN-BRADLEY	CB-5605
					MIL SPEC	RC07G560J
R12	RE-0271-27	RES SM 270 EW 5%	EA	7.00	DALE	CRCW1206-271JB
R13	RE-0180-27	RES SM 18 EW 5%	EA	3.00	DALE	CRCW1206-180JB
R14	RE-0271-27	RES SM 270 EW 5%	EA	-		
R15	RB-0202-23	RES CF 2K QW 5%	EA	2.00	BEC	B25J 2K
R16	RB-0103-23	RES CF 10K QW 5%	EA	9.00	NIC	NCF25-10K-B
R17	RB-0272-23	RES CF 2.7K QW 5%	EA	2.00	NIC	NCF25-2.7K-B
R18	RA-0560-23	RES CC 56 QW 5%	EA	-		
R19	RB-0102-23	RES CF 1K QW 5%	EA	7.00	NIC	NCF25-1K-B
R20	RB-0102-23	RES CF 1K QW 5%	EA	-		
R21	RB-0102-23	RES CF 1K QW 5%	EA	-		
R22	RE-0272-27	RES SM 2.7K EW 5%	EA	6.00	KOA SPEER	RM73B2BT 272J
R23	RE-0751-27	RES SM 750 EW 5%	EA	6.00	KOA SPEER	RM73B2B 751J
R24	RE-0680-27	RES SM 68 EW 5%	EA	6.00	KOA SPEER	RM73B2B 680J
R25	RE-0221-27	RES SM 220 EW 5%	EA	6.00	DALE	CRCW1206-221JB
R26	RE-0101-27	RES SM 100 EW 5%	EA	3.00	KOA SPEER	RM73B2B 101JT-X
R27	RE-0621-27	RES SM 620 EW 5%	EA	1.00	KOA SPEER	RM73B2BT 621J
R28	RE-0390-27	RES SM 39 EW 5%	EA	2.00	KOA SPEER	RM73B2BT 390J
R29	RE-0221-27	RES SM 220 EW 5%	EA	-		
R30	RE-0272-27	RES SM 2.7K EW 5%	EA	-		
R31	RE-0751-27	RES SM 750 EW 5%	EA	-		
R32	RC-3321-12	RES MF 3.32K EW 1%	EA	1.00	DALE	CMF-55 3321FT-1
					MIL SPEC	RN-55D 3321F
R33	RE-0680-27	RES SM 68 EW 5%	EA	-		
R34	RE-0151-27	RES SM 150 EW 5%	EA	1.00	KOA SPEER	RM73B2B 151J
R35	RE-0121-27	RES SM 120 EW 5%	EA	6.00	KOA SPEER	RM73B2B 121J
R36	RE-0272-27	RES SM 2.7K EW 5%	EA	-		
R37	RE-0751-27	RES SM 750 EW 5%	EA	-		
R38	RE-0221-27	RES SM 220 EW 5%	EA	-		
R39	RE-0680-27	RES SM 68 EW 5%	EA	-		
R40	RC-2430-12	RES MF 243 EW 1%	EA	1.00	DALE	CMF-55 2430FT-1
					MIL SPEC	RN-55D 2430F
R41	RC-2001-12	RES MF 2K EW 1%	EA	-		
R44	RB-0151-23	RES CF 150 QW 5%	EA	1.00	NIC	NCF25-150-B
R45	RC-2201-12	RES MF 2.2K EW 1%	EA	1.00	DALE	CMF-55 2201FT-1

NAME: RF OUTPUT BOARD NAV 2000R ASSY NO: 20-5868-00

REVISION: 10 DATE: 02/16/2001

ITEM/ SYMBOL	JcAIR PART NO.	DESCRIPTION	U/M	QTY	MANUFACTURER	MANF'S P/N
R46	RC-1002-12	RES MF 10K EW 1%	EA	5.00	DALE	CMF-55 1002FT-1
					MIL SPEC	RN-55D 1002F
R47	RC-1002-12	RES MF 10K EW 1%	EA	-		
R48	RC-4992-12	RES MF 49.9K EW 1%	EA	3.00	DALE	CMF-55 4992FT-1
					MIL SPEC	RN-55D 4992F
R49	RC-4992-12	RES MF 49.9K EW 1%	EA	-		
R50	RB-0202-23	RES CF 2K QW 5%	EA	-		
R51	RB-0103-23	RES CF 10K QW 5%	EA	-		
R52	RB-0272-23	RES CF 2.7K QW 5%	EA	-		
R53	RE-0101-27	RES SM 100 EW 5%	EA	-		
R54	RE-0272-27	RES SM 2.7K EW 5%	EA	-		
R55	RE-0221-27	RES SM 220 EW 5%	EA	-		
R56	RE-0680-27	RES SM 68 EW 5%	EA	-		
R57	RE-0271-27	RES SM 270 EW 5%	EA	-		
R58	RE-0180-27	RES SM 18 EW 5%	EA	-		
R59	RE-0271-27	RES SM 270 EW 5%	EA	-		
R60	RE-0101-27	RES SM 100 EW 5%	EA	-		
R61	RE-0272-27	RES SM 2.7K EW 5%	EA	-		
R62	RE-0751-27	RES SM 750 EW 5%	EA	-		
R63	RE-0121-27	RES SM 120 EW 5%	EA	-		
R64	RE-0221-27	RES SM 220 EW 5%	EA	-		
R65	RE-0680-27	RES SM 68 EW 5%	EA	-		
R66	RE-0271-27	RES SM 270 EW 5%	EA	-		
R67	RE-0180-27	RES SM 18 EW 5%	EA	-		
R68	RE-0271-27	RES SM 270 EW 5%	EA	-		
R69	RE-0056-24	RES SM 5.6 EW 1%	EA	1.00	KOA SPEER	RK73H2B 5R60F
R70	RE-3321-24	RES SM 3.32K EW 1%	EA	1.00	KOA SPEER	RK73H2B 3321F
R71	RE-0562-24	RES SM 56.2 EW 1%	EA	1.00	KOA SPEER	RK73H2BTE 56R2F
R72	RE-0820-27	RES SM 82 EW 5%	EA	4.00	KOA SPEER	RM73B2B 820J
R73	RE-0121-27	RES SM 120 EW 5%	EA	-		
R74	RE-0331-27	RES SM 330 EW 5%	EA	2.00	KOA SPEER	RM73B2BTE 331J
R75	RE-0471-27	RES SM 470 EW 5%	EA	2.00	DALE	CRCW1206-471JB
R76	RE-0820-27	RES SM 82 EW 5%	EA	-		
R77	RE-0121-27	RES SM 120 EW 5%	EA	-		
R78	RE-0820-27	RES SM 82 EW 5%	EA	-		
R79	RE-0121-27	RES SM 120 EW 5%	EA	-		
R80	RE-0331-27	RES SM 330 EW 5%	EA	-		
R81	RE-0471-27	RES SM 470 EW 5%	EA	-		
R82	RE-0820-27	RES SM 82 EW 5%	EA	-		
R83	RE-0121-27	RES SM 120 EW 5%	EA	-		
R84	RB-0222-23	RES CF 2.2K QW 5%	EA	3.00	NIC	NCF25-2.2K-B
R85	RB-0222-23	RES CF 2.2K QW 5%	EA	-		
R86	RA-0270-23	RES CC 27 QW 5%	EA	1.00	MIL SPEC	RC07G270J
					MIL SPEC	RC07GF270J
R87	RA-0241-23	RES CC 240 QW 5%	EA	1.00	ALLEN-BRADLEY	CB-2415
					MIL SPEC	RC07G241J
R88	RA-0221-23	RES CC 220 QW 5%	EA	1.00	MIL SPEC	RC07G221J
					MIL SPEC	RCR07G221JS

NAME: RF OUTPUT BOARD NAV 2000R ASSY NO: 20-5868-00

REVISION: 10 DATE: 02/16/2001

ITEM/ SYMBOL	JcAIR PART NO.	DESCRIPTION	U/M	QTY	MANUFACTURER	MANF'S P/N
R89	RA-0620-23	RES CC 62 QW 5%	EA	2.00	ALLEN-BRADLEY	CB-6205
					MIL SPEC	RC07G620J
R91	RA-0271-23	RES CC 270 QW 5%	EA	3.00	MIL SPEC	RC07G271J
					MIL SPEC	RC07GF271J
R92	RA-0152-23	RES CC 1.5K QW 5%	EA	13.00	ALLEN-BRADLEY	CB-1525
					MIL SPEC	RC07G152J
					MIL SPEC	RC07GF152J
R93	RA-0152-23	RES CC 1.5K QW 5%	EA	-		
R94	RA-0152-23	RES CC 1.5K QW 5%	EA	-		
R95	RA-0152-23	RES CC 1.5K QW 5%	EA	-		
R96	RA-0152-23	RES CC 1.5K QW 5%	EA	-		
R97	RA-0152-23	RES CC 1.5K QW 5%	EA	-		
R98	RA-0152-23	RES CC 1.5K QW 5%	EA	-		
R99	RA-0152-23	RES CC 1.5K QW 5%	EA	-		
R100	RA-0152-23	RES CC 1.5K QW 5%	EA	-		
R101	RA-0152-23	RES CC 1.5K QW 5%	EA	-		
R102	RA-0152-23	RES CC 1.5K QW 5%	EA	-		
R103	RA-0152-23	RES CC 1.5K QW 5%	EA	-		
R104	RA-0271-23	RES CC 270 QW 5%	EA	-		
R105	RA-0271-23	RES CC 270 QW 5%	EA	-		
R106	RA-0240-23	RES CC 24 QW 5%	EA	3.00	ALLEN-BRADLEY	CB-2405
					MIL SPEC	RC07G240J
R107	RA-0240-23	RES CC 24 QW 5%	EA	-		
R108	RA-0240-23	RES CC 24 QW 5%	EA	-		
R109	RA-0201-43	RES CC 200 1W 5%	EA	1.00	ALLEN-BRADLEY	GB-2015
R110	RC-1002-12	RES MF 10K EW 1%	EA	-		
R111	RC-1002-12	RES MF 10K EW 1%	EA	-		
R112	RB-0103-23	RES CF 10K QW 5%	EA	-		
R114	RE-0390-27	RES SM 39 EW 5%	EA	-		
R115	RA-0620-23	RES CC 62 QW 5%	EA	-		
R116	RE-0131-27	RES SM 130 EW 5%	EA	2.00	DALE	CRCW1206-131JB
R117	RE-0442-24	RES SM 44.2 EW 1%	EA	1.00	KOA SPEER	RK73H2BTE 44R2F
R118	RE-0131-27	RES SM 130 EW 5%	EA	-		
R119	RC-1003-12	RES MF 100K EW 1%	EA	1.00	DALE	CMF-55 1003FT-1
					MIL SPEC	RN-55D 1003F
R120	RC-2002-12	RES MF 20K EW 1%	EA	4.00	DALE	CMF-55 2002FT-1
					MIL SPEC	RN-55D 2002F
R121	RC-5492-12	RES MF 54.9K EW 1%	EA	1.00	DALE	CMF-55 5492FT-1
					MIL SPEC	RN-55D 5492F
R122	RC-4992-12	RES MF 49.9K EW 1%	EA	-		
R123	RC-2002-12	RES MF 20K EW 1%	EA	-		
R124	RB-0473-23	RES CF 47K QW 5%	EA	1.00	NIC	NCF25-47K-B
R125	RC-2492-12	RES MF 24.9K EW 1%	EA	1.00	DALE	CMF-55 2492FT-1
					MIL SPEC	RN-55D 2492F
R126	RC-2002-12	RES MF 20K EW 1%	EA	-		
R127	RB-0102-23	RES CF 1K QW 5%	EA	-		

NAME: RF OUTPUT BOARD NAV 2000R ASSY NO: 20-5868-00

REVISION: 10 DATE: 02/16/2001

ITEM/ SYMBOL	JcAIR PART NO.	DESCRIPTION	U/M	QTY	MANUFACTURER	MANF'S P/N
R128	RC-2002-12	RES MF 20K EW 1%	EA	-		
R129	RC-2001-12	RES MF 2K EW 1%	EA	-		
R130	RB-0224-23	RES CF 220K QW 5%	EA	1.00	NIC	NCF25-220K-B
R132	RC-1822-12	RES MF 18.2K EW 1%	EA	1.00	DALE	CMF-55 1822FT-1
					MIL SPEC	RN-55D 1822F
R133	RC-1002-12	RES MF 10K EW 1%	EA	-		
R134	RC-2741-12	RES MF 2.74K EW 1%	EA	1.00	DALE	CMF-55 2741FT-1
					MIL SPEC	RN-55D 2741F
R135	RC-4751-12	RES MF 4.75K EW 1%	EA	1.00	DALE	CMF-55 4751FT-1
					MIL SPEC	RN-55D 4751F
R136	RE-0751-27	RES SM 750 EW 5%	EA	-		
R137	RJ-0013-15	RES VR 5K 25T 0.5W 10% (.375 SQ PCMT)	EA	1.00	BOURNS	3296W-1-502
					CLAROSTAT	364-W-5K
R139	RE-0271-27	RES SM 270 EW 5%	EA	-		
R140	RE-0272-27	RES SM 2.7K EW 5%	EA	-		
R141	RE-0751-27	RES SM 750 EW 5%	EA	-		
R142	RE-0680-27	RES SM 68 EW 5%	EA	-		
R143	RB-0561-23	RES CF 560 QW 5%	EA	1.00	NIC	NCF25-560-B
R144	RB-0103-23	RES CF 10K QW 5%	EA	-		
R145	RB-0103-23	RES CF 10K QW 5%	EA	-		
R146	RB-0103-23	RES CF 10K QW 5%	EA	-		
R147	RB-0222-23	RES CF 2.2K QW 5%	EA	-		
R148	RA-0152-23	RES CC 1.5K QW 5%	EA	-		
R149	RB-0102-23	RES CF 1K QW 5%	EA	-		
R150	RB-0103-23	RES CF 10K QW 5%	EA	-		
R151	RB-0103-23	RES CF 10K QW 5%	EA	-		
R152	RB-0103-23	RES CF 10K QW 5%	EA	-		
R153	RB-0102-23	RES CF 1K QW 5%	EA	-		
R154	RB-0562-23	RES CF 5.6K QW 5%	EA	1.00	NIC	NCF25-5.6K-B
R155	RB-0102-23	RES CF 1K QW 5%	EA	-		
R156	RB-0223-23	RES CF 22K QW 5%	EA	1.00	NIC	NCF25-22K-B
R157	RE-0221-27	RES SM 220 EW 5%	EA	-		
RN1	RH-4103-16	RES RN 10K X 9 BUSSED	EA	1.00	BOURNS	4610X-101-103
					DALE	CSC10A-01-103G
					PANASONIC	EXB-R89103K
T1	19-7133-00	TRANSFORMER BALUN SRFC MNT 6MHZ-600MHZ	EA	6.00	TOKO	458DB-1008
T2	19-7133-00	TRANSFORMER BALUN SRFC MNT 6MHZ-600MHZ	EA	-		
T3	19-7133-00	TRANSFORMER BALUN SRFC MNT 6MHZ-600MHZ	EA	-		
T4	19-7133-00	TRANSFORMER BALUN SRFC MNT 6MHZ-600MHZ	EA	-		
T5	19-7133-00	TRANSFORMER BALUN SRFC MNT 6MHZ-600MHZ	EA	-		
T6	19-7133-00	TRANSFORMER BALUN SRFC MNT 6MHZ-600MHZ	EA	-		
U1	12-7598-01	IC 27 OP AMP PKG=P08 TMP=C SPD=100US	EA	2.00	ANALOG DEVICES	OP27GP (NO SUBSTITUTE)
					PMI	OP27GP (NO SUBSTITUTE)
U2	12-8075-01	IC 2951 VOLT REGULATOR PKG=P08 TMP=I	EA	1.00	MICREL	MIC2951-03BN
U3	12-8171-30	IC 145193 SYNTHSZR PK=SO20 T=I V=2.7-5.5	EA	1.00	MOTOROLA	MC145193F
U4	12-7612-01	IC 78L05 REGULATOR PKG=TO92 TMP=O V=5	EA	2.00	NATIONAL	LM78L05ACZ

NAME: RF OUTPUT BOARD NAV 2000R

ASSY NO: 20-5868-00

REVISION: 10

DATE: 02/16/2001

ITEM/ SYMBOL	JcAIR PART NO.	DESCRIPTION	U/M	QTY	MANUFACTURER	MANF'S P/N
U5	12-7797-00	IC 74HC238 DECDR/MULTIPLXR PKG=P16 TMP=I	EA	2.00	RCA	CD74HC238E
					SIGNETICS	74HC238N
U6	12-7797-00	IC 74HC238 DECDR/MULTIPLXR PKG=P16 TMP=I	EA	-		
U7	12-7322-01	IC 317 ADJ POS REGULATOR PKG=TO220 TMP=C	EA	1.00	MOTOROLA	LM317T
					NATIONAL	LM317T
U8	12-7612-01	IC 78L05 REGULATOR PKG=TO92 TMP=O V=5	EA	-		
U9	12-7598-01	IC 27 OP AMP PKG=P08 TMP=C SPD=100US	EA	-		
U10	12-8164-00	IC 74HC4046A CMOS LOGIC PKG=P16 TMP=I	EA	1.00	RCA	CD74HC4046AE
U11	12-8675-01	IC 12080 1.1GHZ PRESCALER PKG=SO8 TMP=I	EA	1.00	MOTOROLA	MC12080DR2
U12	12-7194-00	IC 10EL32 DIV 2 DIVIDER PKG=SO8 TMP=I	EA	2.00	MOTOROLA	MC10EL32D
U13	12-7194-00	IC 10EL32 DIV 2 DIVIDER PKG=SO8 TMP=I	EA	-		
U14	12-8181-00	IC 1678 MMIC AMPLIFIER PKG=SM08 TMP=I	EA	1.00	NEC	UPC1678G
U15	12-8185-01	IC 75188 QUAD LINE DRIVER PKG=P14 TMP=C	EA	2.00	TI	SN75188N
U16	12-8185-01	IC 75188 QUAD LINE DRIVER PKG=P14 TMP=C	EA	-		
U17	12-7225-02	IC 393A DUAL COMPARATOR PKG=P08 TMP=C	EA	1.00	NATIONAL	LM393AN
U18	12-7023-00	IC 1458 DUAL OP AMP PKG=P08 TMP=C	EA	1.00	KUSTOM	007-7023-00
					MOTOROLA	MC1458CP1
					NATIONAL	LM1458N
U20	12-8484-01	IC MAR-4 MONO AMP 1000MHZ PKG=O(SM) TP=O	EA	1.00	MINI-CIRCUITS	MAR-4SM
REF1	02-5868-00	SCHEMATIC RF OUTPUT BD NAV 2000R	EA	-		
REF2	25-5868-00	ASSY DWG RF OUTPUT BD NAV 2000R	EA	-		

REVISIONS			
REV	DESCRIPTION	DATE	APPROVED
3	MISC CLARIFICATIONS. ADD R157	4-[illegible]	[illegible]
4	ADD FL1 AND NOTE 8	4-[illegible]	[illegible]
5	UPDATE PER REV 3 ARTWORK	[illegible]	[illegible]
6	ADD NOTE 8	[illegible]	[illegible]
7	ADD C200 AND NOTE 9	[illegible]	[illegible]
8	DELETE C200 AND NOTE 9	[illegible]	[illegible]
9	UPDATE PER REV 5 ARTWORK	[illegible]	[illegible]
10	ADD NOTE 9	[illegible]	[illegible]

03-5868-03 REV 5
SILKSCREEN

ASSY NO: 20-5868-[redacted]
SERIAL NO [redacted]

NOTES:

1. FOR COMPLETE ITEM DESCRIPTION REFERENCE BILL OF MATERIALS 20-5868-00.
2. SLIDE ITEM 2 (FERRITE BEADS) ONTO LEADS (AS SHOWN) OF COMPONENTS L44 AND C168.
3. SOLDER ITEM 5 (2X) FLAT AGAINST PC BOARD AS SHOWN. SOLDER INNER CONDUCTOR INTO "E" HOLES AS SHOWN.
4. TRIM OUTER INSULATOR OF ITEM 6, AT EACH END, AND SOLDER COAX SHIELD FLAT AGAINST PC BOARD AS SHOWN. SOLDER INNER CONDUCTOR INTO "E" HOLES AS SHOWN.
5. CONNECTORS J1 AND J2 ARE INSTALLED FROM FARSIDE.
6. MOUNT ALL COMPONENTS AS CLOSE TO THE BOARD SURFACE AS POSSIBLE.
7. SOLDER FL1 CASE TO ADJACENT FENCE. SOLDER COAX FROM E21 TO FL1-8 AND E20 TO FL1-1. SOLDER OUTER CONDUCTORS TO FL1 CASE (GND).
8. SECURE U7 TO MODULE MOUNTING HOLE WITH NYLON SCREW.
9. INSTALL C209 ACROSS R41. WITH POSITIVE LEAD TOWARDS U7.

20-9520-52	01-0520-XX
NEXT ASS'Y	USED ON
UNIT	NAV 2000R

DIMENSIONS ARE IN INCHES
TOLERANCES ARE:
DECIMALS: .XX ±.01 .XXX ±.005
FRACTIONS: ± 1/64
ANGLES: ±1/2 DEG

MATERIAL: FR4 .062 THK 1 OZ CU

FINISH: NA

BFGOODRICH AEROSPACE PROPRIETARY INFORMATION

APPROVALS	DATE
DRAWN NRH	7-23-92
CHECKED [illegible]	2/8/01
ISSUED [illegible]	2/16/01

FILE NAME 586800R4.PCB

BFGoodrich Aerospace
JcAIR Test Systems

400 NEW CENTURY PARKWAY
NEW CENTURY, KS 66031-0009 USA
PHONE (913) 764-2452
FAX (913) 782-5104

ASSEMBLY
RF OUTPUT SYNTHESIZER BOARD

SIZE	CAGE NO.	DWG NO	REV
B	41364	25-5868-00	10

SHEET 1 OF 1

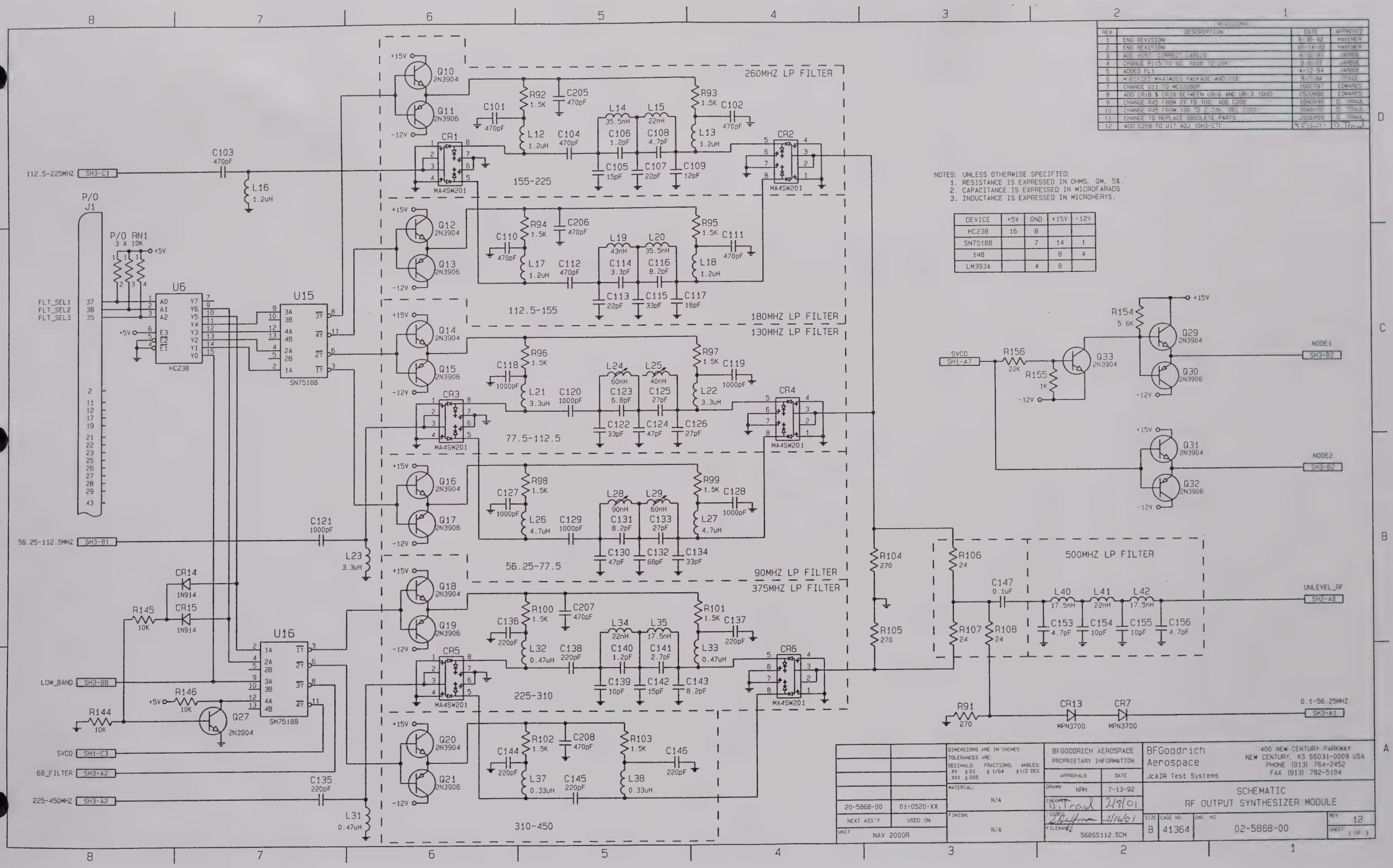

REVISIONS			
REV	DESCRIPTION	DATE	APPROVED
1	ENG REVISION	6-30-92	HAVENER
2	ENG REVISION	10-14-92	HAVENER
3	ADD R157 CORRECT LABELS	[illegible]	[illegible]
4	CHANGE R115 TO 62, R108 TO 20K	[illegible]	JARBOE
5	ADDED FL1	4-12-94	JARBOE
6	MODIFIED MA4SW201 PACKAGE AND U16	[illegible]	[illegible]
7	CHANGE U11 TO MC12080P	16OCT97	EDWARDS
8	ADD CR18 & CR19 BETWEEN U9-6 AND U8-3 (SH2)	05JUN98	EDWARDS
9	CHANGE R45 FROM 27 TO 100, ADD C200	18NOV99	D. TRAUL
10	CHANGE R45 FROM 100 TO 2.2K, DEL C200	30MAY00	D. TRAUL
11	CHANGE TO REPLACE OBSOLETE PARTS	26SEP00	D. TRAUL
12	ADD C209 TO U17 ADJ (SH3-C7)	[illegible]	D. Traul

NOTES: UNLESS OTHERWISE SPECIFIED:
1. RESISTANCE IS EXPRESSED IN OHMS, QW, 5%.
2. CAPACITANCE IS EXPRESSED IN MICROFARADS.
3. INDUCTANCE IS EXPRESSED IN MICROHERYS.

DEVICE	+5V	GND	+15V	-12V
HC238	16	8		
SN75188		7	14	1
148			8	4
LM393A		4	8	

20-5868-00	01-0520-XX	DIMENSIONS ARE IN INCHES TOLERANCES ARE: DECIMALS: .XX ±.01 .XXX ±.005 FRACTIONS: ± 1/64 ANGLES: ±1/2 DEG	BFGOODRICH AEROSPACE PROPRIETARY INFORMATION	BFGoodrich Aerospace JcAIR Test Systems	400 NEW CENTURY PARKWAY NEW CENTURY, KS 66031-0009 USA PHONE (913) 764-2452 FAX (913) 782-5104
NEXT ASS'Y	USED ON	MATERIAL: N/A	APPROVALS / DATE: DRAWN NRH 7-13-92; CHECKED D. Traul 2/8/01; ISSUED [illegible] 2/16/01	SCHEMATIC RF OUTPUT SYNTHESIZER MODULE	
UNIT NAV 2000R		FINISH: N/A	FILENAME 5686S112.SCH	SIZE B; CAGE NO. 41364; DWG NO 02-5868-00; REV 12; SHEET 1 OF 3	

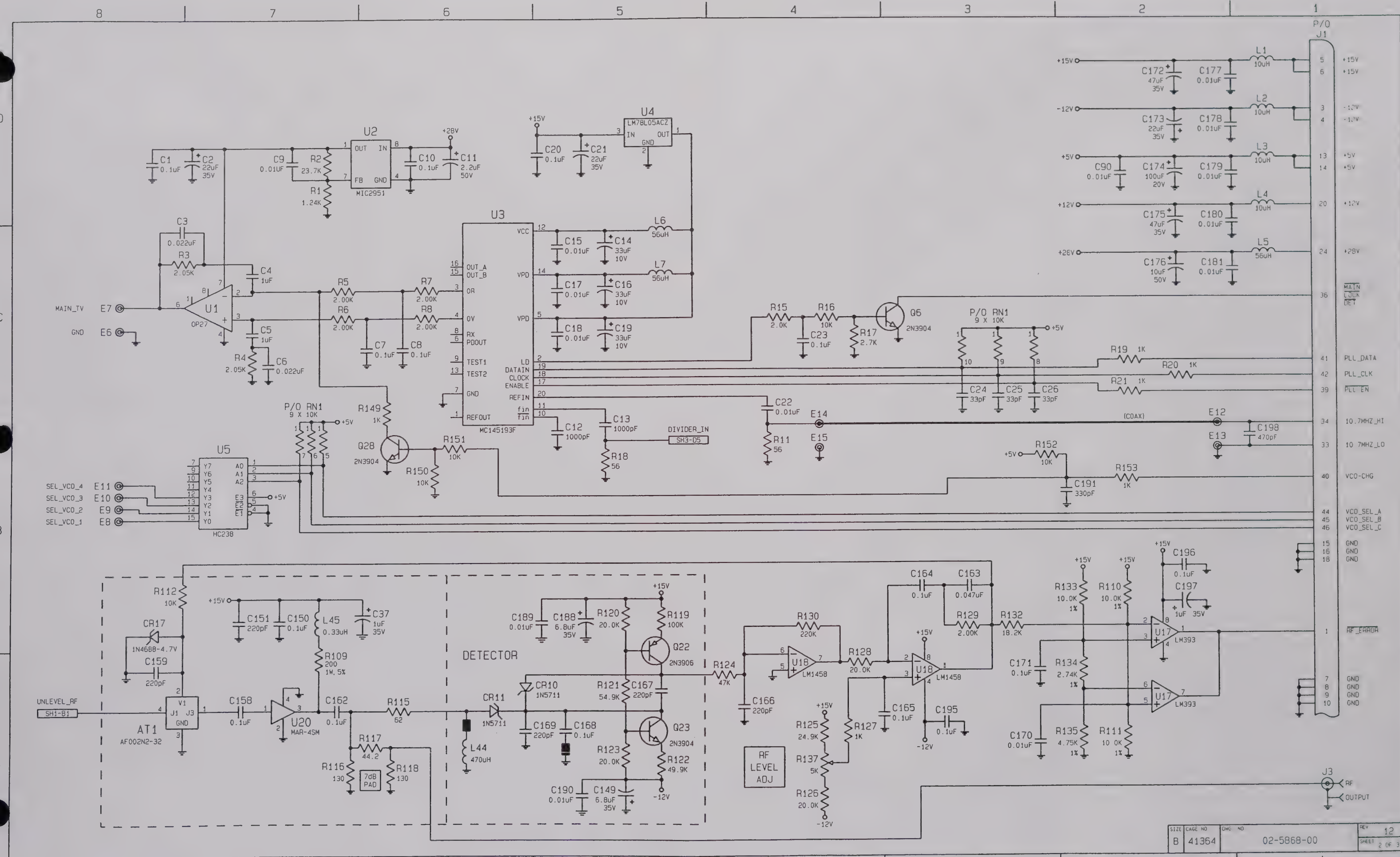

DETECTOR
RF LEVEL ADJ
7dB PAD
UNLEVEL_RF
SH1-B1
AT1
AF002N2-32
U20
MAR-4SM
CR17
1N4688-4.7V
CR11
1N5711
CR10
1N5711
Q22
2N3906
Q23
2N3904
U18
LM1458
U17
LM393
U1
OP27
U2
MIC2951
U3
MC145193F
U4
LM78L05ACZ
U5
HC238
Q28
2N3904
Q6
2N3904
P/O RN1
9 X 10K
DIVIDER_IN
SH3-D5
MAIN_TV
GND
SEL_VCO_4
SEL_VCO_3
SEL_VCO_2
SEL_VCO_1
(COAX)
P/O J1
+15V
-12V
+5V
+12V
+28V
MAIN LOCK DET
PLL_DATA
PLL_CLK
PLL_EN
10.7MHZ_HI
10.7MHZ_LO
VCO-CHG
VCO_SEL_A
VCO_SEL_B
VCO_SEL_C
GND
RF_ERROR
J3
RF OUTPUT
SIZE B
CAGE NO 41364
DWG NO 02-5868-00
REV 12
SHEET 2 OF 3

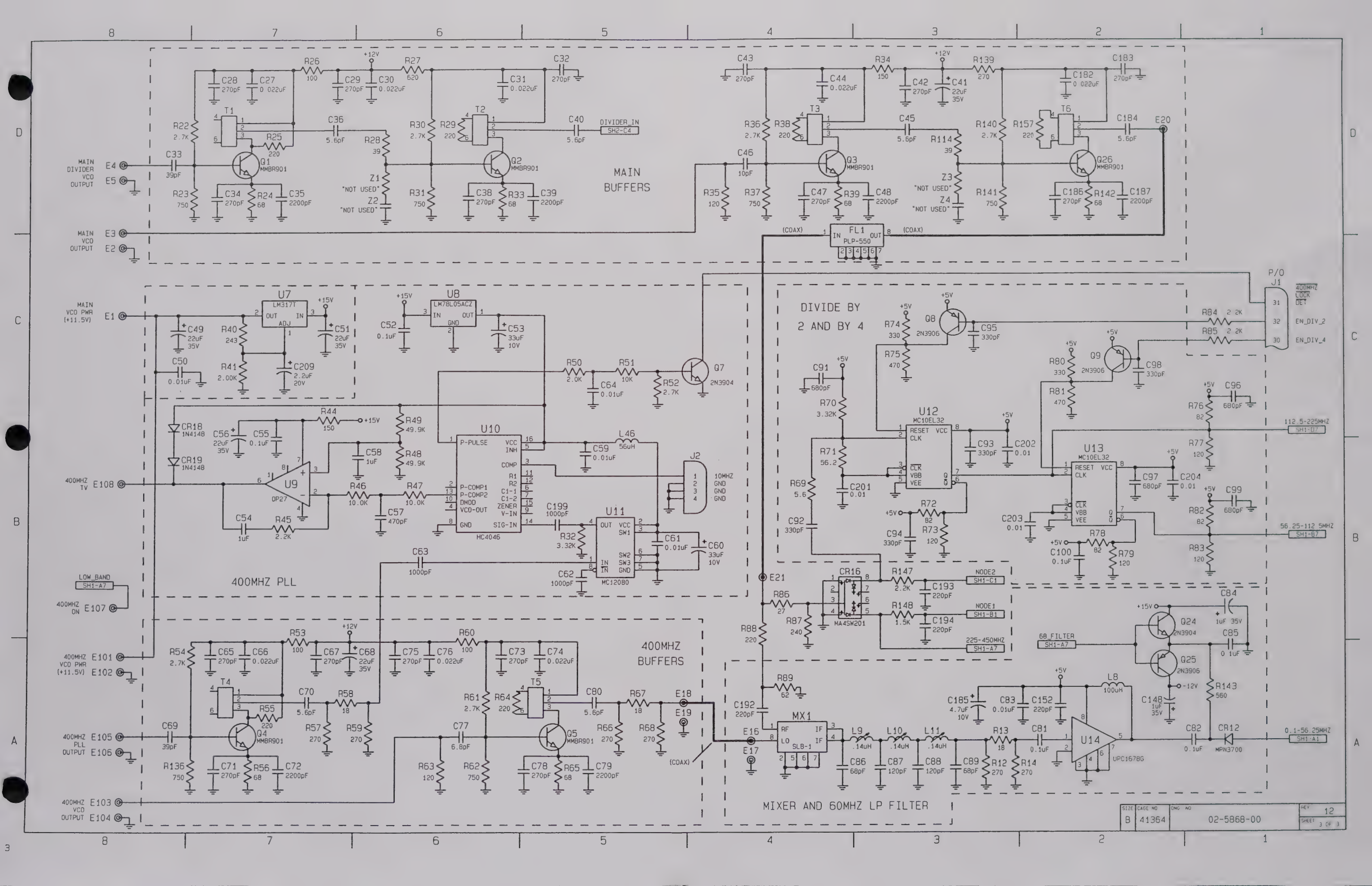
MAIN BUFFERS
DIVIDE BY 2 AND BY 4
400MHZ PLL
400MHZ BUFFERS
MIXER AND 60MHZ LP FILTER
MAIN DIVIDER VCO OUTPUT
MAIN VCO OUTPUT
MAIN VCO PWR (+11.5V)
400MHZ TV
LOW_BAND
400MHZ ON
400MHZ VCO PWR (+11.5V)
400MHZ PLL OUTPUT
400MHZ VCO OUTPUT
DIVIDER_IN
SH2-C4
FL1
PLP-550
(COAX)
U7
LM317T
U8
LM78L05ACZ
U9
OP27
U10
HC4046
U11
MC12080
U12
MC10EL32
U13
MC10EL32
U14
UPC1678G
MX1
SLB-1
CR16
MA4SW201
J2
10MHZ
GND
P/O J1
400MHZ LOCK DET
EN_DIV_2
EN_DIV_4
112.5-225MHZ
SH1-D7
56.25-112.5MHZ
SH1-B7
NODE2
SH1-C1
NODE1
SH1-B1
225-450MHZ
SH1-A7
68_FILTER
SH1-A7
0.1-56.25MHZ
SH1-A1
SIZE B
CAGE NO 41364
DWG NO 02-5868-00
REV 12
SHEET 3 OF 3

JcAIR INC.

NAME: MOTHER BOARD NAV 2000R

ASSY NO: 20-5900-00

REVISION: 02

DATE: 01/24/2001

ITEM/ SYMBOL	JcAIR PART NO.	DESCRIPTION	U/M	QTY	MANUFACTURER	MANF'S P/N
1	09-5900-00	PCB MOTHER BOARD NAV 2000R	EA	1.00	QMC	09-5900-00
2	47-2089-12	HEATSINK MOTHERBOARD NAV 2000R	EA	1.00	JCAIR	47-2089-12
3	89-2104-06	SCREW PHP #4-40 X .375	EA	2.00	MIL SPEC	MS51957-15
4	89-0904-00	WASHER LOCK #4	EA	2.00	MIL SPEC	MS35338-135
					MIL SPEC	MS35338-78
5	89-0104-00	WASHER FLAT #4 .214 OD	EA	2.00	NATIONAL AERO	NAS620C4L
6	10-0020-01	INSULATOR BUSHING .200 OD .115 ID NYLON	EA	2.00	SEASTROM	5607-45
7	10-0023-02	INSULATOR XSTR TO-220 .750 X .500 .125HL	EA	2.00	EG&G WAKEFIELD	173-9-230-P
					SPC	1200-09FG-58
8	89-1104-00	NUT HEX #4 SM PAT SS	EA	2.00	NATIONAL AERO	NAS671C4
C1	CH-0103-00	CAP CK .01UF 50V 10%	EA	2.00	MALLORY	CK05BX103K
C2	CA-1221-02	CAP AL 220UF 16V	EA	3.00	PANASONIC	ECE-B1CU221
C3	CA-1221-02	CAP AL 220UF 16V	EA	-		
C4	CH-0103-00	CAP CK .01UF 50V 10%	EA	-		
C5	CA-1221-02	CAP AL 220UF 16V	EA	-		
C6	CB-1685-05	CAP TN 6.8UF 35V 10%	EA	1.00	KEMET	T110B685K035AS
					SPRAGUE	150D685X9035B2
C7	CB-1336-01	CAP TN 33UF 10V 10%	EA	2.00	KEMET	T110B336K010AS
					MIL SPEC	M39003/01-2257
C8	CH-1474-00	CAP CK .47UF 50V 10%	EA	1.00	MALLORY	CK06BX474K
C9	CB-1336-01	CAP TN 33UF 10V 10%	EA	-		
J101	30-5246-48	CONN CARD EDGE TRPL RCPT 48 POS	EA	4.00	TRW	009-00014-5
					TRW	43-2485
J102	30-5246-48	CONN CARD EDGE TRPL RCPT 48 POS	EA	-		
J103	30-5246-48	CONN CARD EDGE TRPL RCPT 48 POS	EA	-		
J104	30-5246-48	CONN CARD EDGE TRPL RCPT 48 POS	EA	-		
J108	30-1959-12	CONN HOUSING DBL ROW 12 POS	EA	1.00	MOLEX	39-29-9125
					MOLEX	39-29-9129
L1	19-2180-47	INDUCTOR HI CURRENT 47UH 4A 15%	EA	2.00	DALE	IHD-3 47UH 15%
L2	19-2180-47	INDUCTOR HI CURRENT 47UH 4A 15%	EA	-		
P1	55-0520-03	CABLE RIBBON 50 LINE NAV 2000	EA	1.00	JCAIR	55-0520-03
P2	55-0520-00	CABLE RIBBON 24 LINE NAV 2000	EA	1.00	JCAIR	55-0520-00
U1	12-7996-00	IC 7905 NEG REGULATOR PKG=TO220 TMP=C	EA	2.00	MOTOROLA	MC7905CT
					NATIONAL	LM7905CT
					TI	UA7905CKC
U2	12-7996-00	IC 7905 NEG REGULATOR PKG=TO220 TMP=C	EA	-		
REF1	25-5900-00	ASSY DWG MOTHER BOARD NAV 2000R	EA	-		
REF2	02-5900-00	SCHEMATIC MOTHER BOARD NAV 2000R	EA	-		

REVISIONS			
REV	DESCRIPTION	DATE	APPROVED
1	MOVE RF CONNECTOR CLEARANCE HOLES	8-4-92	[illegible]
2	UPDATE PER REV 2 ARTWORK	9-25-91	[illegible]
3	ADD NOTE 2	[illegible]	[illegible]
4	CHANGE J106 PER REV 3 ARTWORK	2/16/01	[illegible]

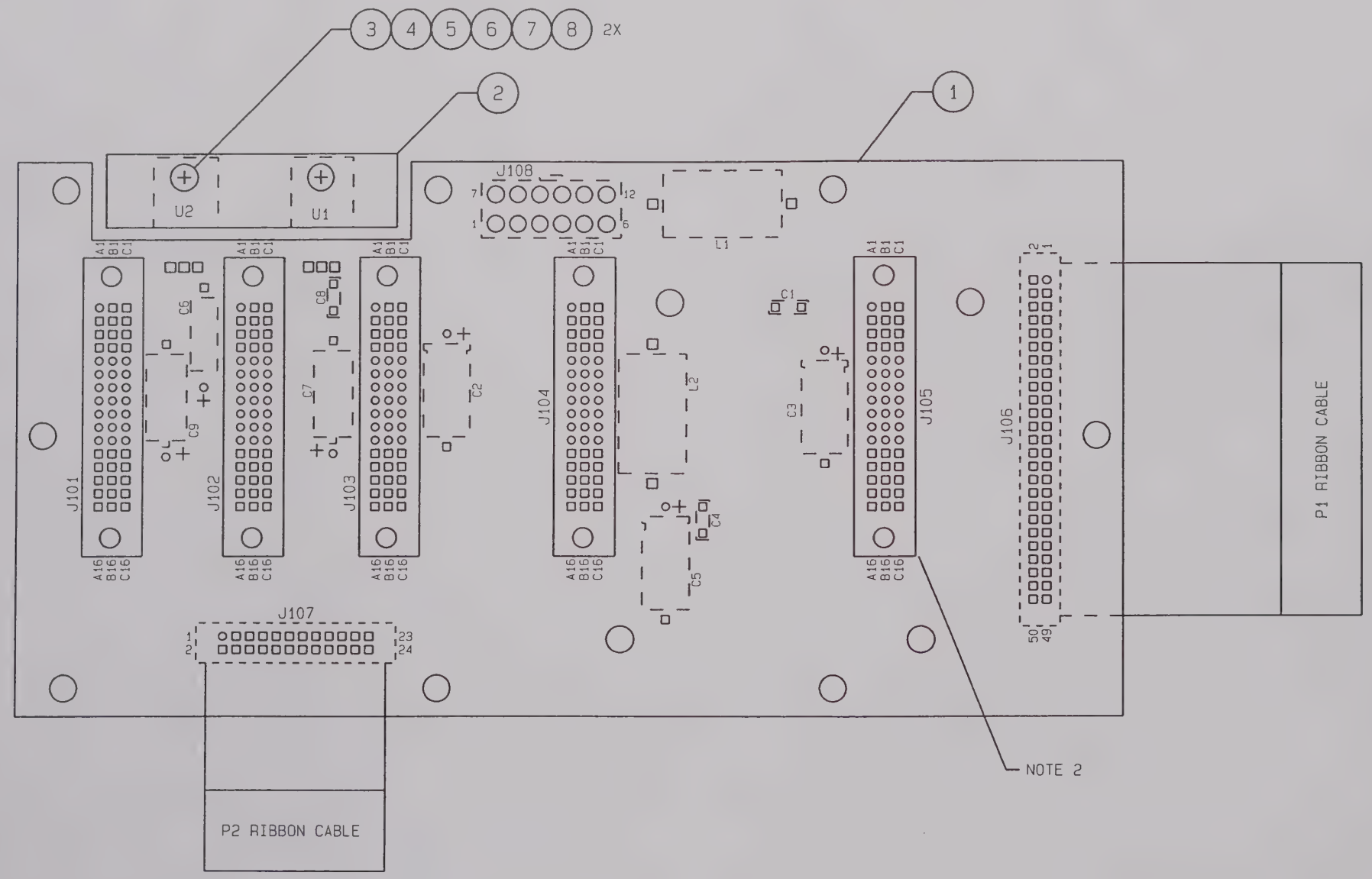

NOTES:

1. FOR COMPLETE ITEM DESCRIPTION REFERENCE BILL OF MATERIALS 20-5900-00.
2. J105 IS NOT TO BE INSTALLED.

20-5900-00	01-0520-XX
NEXT ASS'Y	USED ON
UNIT	NAV 2000R

DIMENSIONS ARE IN INCHES
TOLERANCES ARE:
DECIMALS: XX ± .01, XXX ± .005
FRACTIONS: ± 1/64
ANGLES: ± 1/2 DEG

MATERIAL: FR4 .062 THK 1 OZ CU

FINISH: NA

BFGOODRICH AEROSPACE PROPRIETARY INFORMATION

APPROVALS	DATE
DRAWN NAH	8-4-92
CHECKED	2/16/01
ISSUED	2/16/01

FILE NAME: 590000R3.PCB

BFGoodrich Aerospace
JCAIR Test Systems
400 NEW CENTURY PARKWAY
NEW CENTURY, KS 66031-0009 USA
PHONE (913) 764-2452
FAX (913) 782-5104

ASSEMBLY
MOTHER BOARD

SIZE	CAGE NO	DWG NO	REV
B	41364	25-5900-00	4

SHEET 1 OF 1

REVISIONS			
REV	DESCRIPTION	DATE	APPROVED
1	ADD APP INTERRUPT AND RESET	05-03-95	MS
2	ADD NOTES	1-24-01	[illegible]

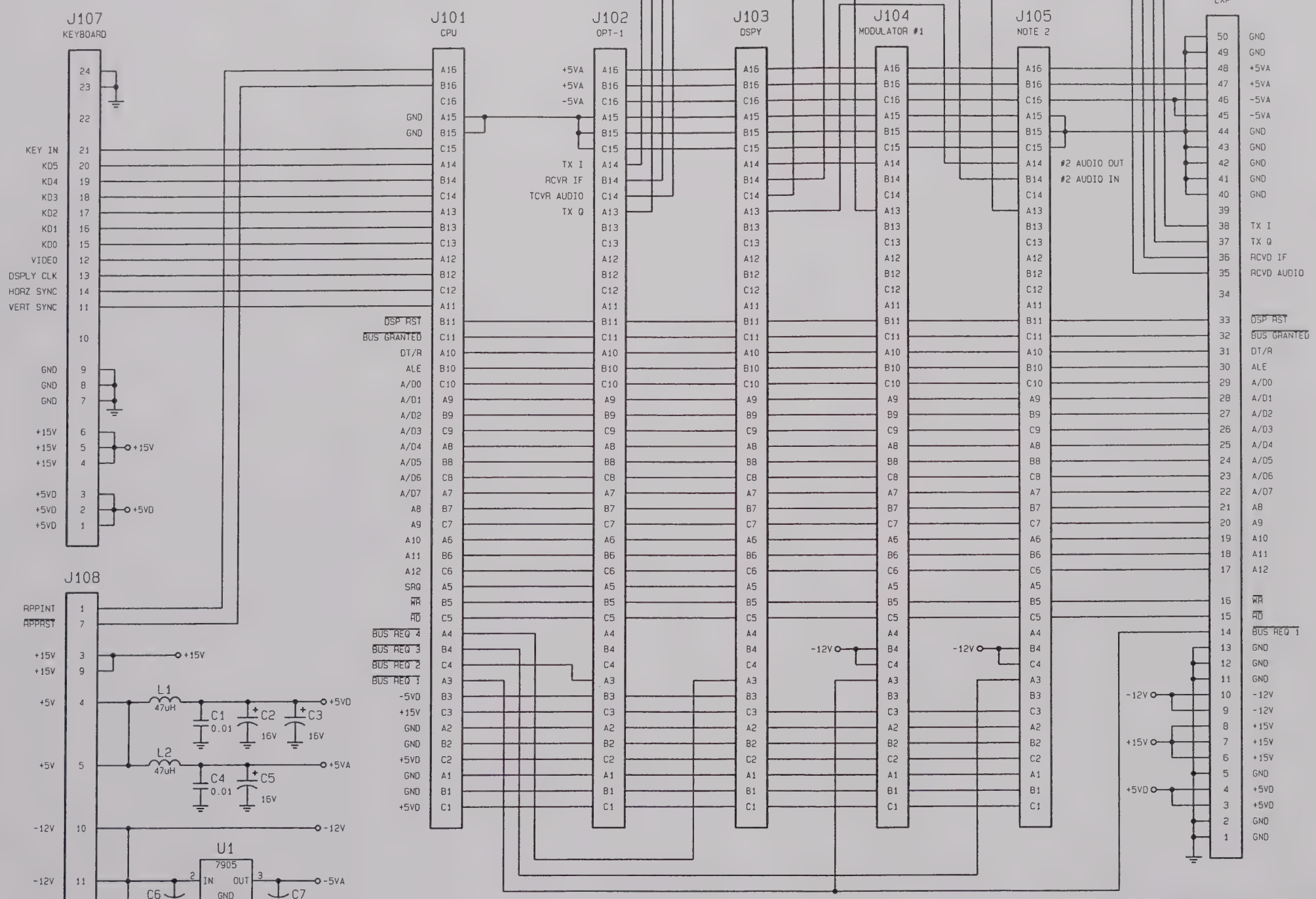

NOTES: UNLESS OTHERWISE SPECIFIED
1. CAPACITANCE IS EXPRESSED IN MICROFARADS.
2. J105 IS NOT INSTALLED.

		DIMENSIONS ARE IN INCHES TOLERANCES ARE: DECIMALS: FRACTIONS. ANGLES .XX ±.01 ± 1/64 ±1/2 DEG .XXX ±.005	BFGOODRICH AEROSPACE PROPRIETARY INFORMATION
		MATERIAL N/A	APPROVALS / DATE
20-5900-00	01-0520-XX	FINISH N/A	DRAWN B PAGE 7-16-92 CHECKED DWH 02-22-94
NEXT ASS'Y	USED ON		ISSUED DWH 1-25-01
UNIT NAV 2000R			FILENAME 590000R2.SCH

BFGoodrich Aerospace
JcAIA Test Systems
400 NEW CENTURY PARKWAY
NEW CENTURY, KS 66031-0009 USA
PHONE (913) 764-2452
FAX (913) 782-5104

SCHEMATIC
MOTHER BOARD

SIZE	CAGE NO.	DWG NO	REV
B	41364	02-5900-00	2

SHEET 1 OF 1

JcAIR INC.

NAME: MODULATOR BOARD NAV-2000R

ASSY NO: 20-5951-00

REVISION: 04

DATE: 04/25/2000

ITEM/ SYMBOL	JcAIR PART NO.	DESCRIPTION	U/M	QTY	MANUFACTURER	MANF'S P/N
1	09-5951-00	PCB MODULATOR NAV 2000R	EA	1.00	QMC	09-5951-00
2	47-2089-26	FENCE RF NAV 2000R	EA	1.00	JCAIR	47-2089-26
3	89-9903-01	SPACER FENCE NUT MODIFIED	EA	4.00	JCAIR	89-9903-01
4	24-4015-00	COAX RG-405	FT	1.00	MIL SPEC	M17/133-RG405
					UNIFORM TUBES	UT-85-M17
5	13-0003-00	FERRITE BEAD RND .146 OD .050 ID .125 LG	EA	1.00	FAIR-RITE	2664000101
6	51-0002-04	TUBING SHRINK CLEAR .187 OD	FT	1.00	ALPHA	FIT-221-3/16
C1	CL-5103-30	CAP SM .01UF 50V 5% X7R	EA	4.00	KEMET	C1206C103J5RAC
C2	CL-5103-30	CAP SM .01UF 50V 5% X7R	EA	-		
C3	CL-5104-30	CAP SM .1UF 50V 5% X7R	EA	8.00	KEMET	C1206C104J5RAC
C4	CL-5104-30	CAP SM .1UF 50V 5% X7R	EA	-		
C5	CL-5103-30	CAP SM .01UF 50V 5% X7R	EA	-		
C6	CL-5103-30	CAP SM .01UF 50V 5% X7R	EA	-		
C7	CL-5104-30	CAP SM .1UF 50V 5% X7R	EA	-		
C8	CL-5104-30	CAP SM .1UF 50V 5% X7R	EA	-		
C9	CH-0102-20	CAP CK .001UF 200V 10%	EA	4.00	MALLORY	CK05BX102K
					SPRAGUE	CK05BX102K
C10	CH-0103-00	CAP CK .01UF 50V 10%	EA	1.00	MALLORY	CK05BX103K
C11	CB-1156-02	CAP TN 15UF 20V 5%	EA	2.00	KEMET	T110B156J020AS
					SPRAGUE	150D156X9020B2
C12	CH-0102-20	CAP CK .001UF 200V 10%	EA	-		
C13	CH-0104-00	CAP CK .1UF 50V 10%	EA	15.00	KEMET	C052K104K5X5CA
					MALLORY	CK05BX104K
					MIL SPEC	M39014/01-1473
					MIL SPEC	M39014/01-1553V
					SPRAGUE	CK05BX104K
C14	CB-1156-02	CAP TN 15UF 20V 5%	EA	-		
C15	CH-0102-20	CAP CK .001UF 200V 10%	EA	-		
C16	CH-0104-00	CAP CK .1UF 50V 10%	EA	-		
C17	CB-1475-01	CAP TN 4.7UF 10V 10%	EA	1.00	KEMET	T110A475K010AS
					MALLORY	TAC475K010P02
					MIL SPEC	M39003/01-2254
					SPRAGUE	150D475X9010A2
C18	CH-0104-00	CAP CK .1UF 50V 10%	EA	-		
C19	CG-0471-11	CAP MC 470PF 100V 10% COG	EA	1.00	KEMET	C315C471K1G5CA
C20	CL-5104-30	CAP SM .1UF 50V 5% X7R	EA	-		
C21	CL-5104-30	CAP SM .1UF 50V 5% X7R	EA	-		
C22	CB-1105-05	CAP TN 1UF 35V 10%	EA	1.00	KEMET	T110A105K035AS
					SPRAGUE	150D105X9035A2
C23	CH-0102-20	CAP CK .001UF 200V 10%	EA	-		
C24	CL-5104-30	CAP SM .1UF 50V 5% X7R	EA	-		
C25	CL-5104-30	CAP SM .1UF 50V 5% X7R	EA	-		
C26	CL-4221-30	CAP SM 220PF 50V 5% COG	EA	1.00	KEMET	C1206C221J5GAC
C27	CH-0221-20	CAP CK 220PF 200V 10%	EA	1.00	MALLORY	CK05BX221K
					SPRAGUE	CK05BX221K

JcAIR INC.

NAME: MODULATOR BOARD NAV-2000R ASSY NO: 20-5951-00

REVISION: 04 DATE: 04/25/2000

ITEM/ SYMBOL	JcAIR PART NO.	DESCRIPTION	U/M	QTY	MANUFACTURER	MANF'S P/N
C28	CH-0101-20	CAP CK 100PF 200V 10%	EA	2.00	SPRAGUE	CK05BX101K
C31	CH-0101-20	CAP CK 100PF 200V 10%	EA	-		
C32	CH-0104-00	CAP CK .1UF 50V 10%	EA	-		
C33	CH-0104-00	CAP CK .1UF 50V 10%	EA	-		
C34	CH-0104-00	CAP CK .1UF 50V 10%	EA	-		
C35	CH-0104-00	CAP CK .1UF 50V 10%	EA	-		
C36	CH-0104-00	CAP CK .1UF 50V 10%	EA	-		
C37	CB-1336-01	CAP TN 33UF 10V 10%	EA	2.00	KEMET	T110B336K010AS
					MIL SPEC	M39003/01-2257
C38	CB-1685-05	CAP TN 6.8UF 35V 10%	EA	2.00	KEMET	T110B685K035AS
					SPRAGUE	150D685X9035B2
C39	CB-1336-01	CAP TN 33UF 10V 10%	EA	-		
C40	CB-1685-05	CAP TN 6.8UF 35V 10%	EA	-		
C41	CH-0104-00	CAP CK .1UF 50V 10%	EA	-		
C42	CH-0104-00	CAP CK .1UF 50V 10%	EA	-		
C43	CH-0104-00	CAP CK .1UF 50V 10%	EA	-		
C44	CH-1105-00	CAP CK 1UF 50V 10%	EA	3.00	KEMET	C06K105K5X5CA
					MALLORY	CK06BX105K
					MIL SPEC	M39014/02-1407
C45	CH-1105-00	CAP CK 1UF 50V 10%	EA	-		
C46	CH-1105-00	CAP CK 1UF 50V 10%	EA	-		
C47	CH-0104-00	CAP CK .1UF 50V 10%	EA	-		
C48	CH-0104-00	CAP CK .1UF 50V 10%	EA	-		
C49	CB-1106-03	CAP TN 10UF 20V 10%	EA	1.00	MIL SPEC	M39003/01-2286
					SPRAGUE	150D106X9020B2
C50	CH-0331-20	CAP CK 330PF 200V 10%	EA	3.00	MALLORY	CK05BX331K
					SPRAGUE	CK05BX331K
C51	CH-0331-20	CAP CK 330PF 200V 10%	EA	-		
C52	CH-0331-20	CAP CK 330PF 200V 10%	EA	-		
C53	CH-0104-00	CAP CK .1UF 50V 10%	EA	-		
C54	CH-0471-20	CAP CK 470PF 200V 10%	EA	1.00	MALLORY	CK05BX471K
					MIL SPEC	M39014/01-1311
					SPRAGUE	CK05BX471K
C55	CH-0104-00	CAP CK .1UF 50V 10%	EA	-		
CR1	07-6021-00	DIODE 1N5711	EA	2.00	HP	1N5711
CR2	07-6021-00	DIODE 1N5711	EA	-		
CR3	07-6032-00	DIODE SIL 1N914 PKG=O TMP=O	EA	2.00	MICRO SEMI	1N914
CR4	07-6032-00	DIODE SIL 1N914 PKG=O TMP=O	EA	-		
J1	30-1977-20	CONN POST HEADER DBL ROW 20 PIN	EA	1.00	CIRCUIT ASSY	CA-D20-42B-63
					SAMTEC	MTSW-110-15-G-D-420
K1	32-0077-00	RELAY SPDT 12VDC PC MNT	EA	1.00	OMRON	G5Y-1-DC12

JcAIR INC.

NAME: MODULATOR BOARD NAV-2000R

ASSY NO: 20-5951-00

REVISION: 04

DATE: 04/25/2000

ITEM/ SYMBOL	JcAIR PART NO.	DESCRIPTION	U/M	QTY	MANUFACTURER	MANF'S P/N
L1	19-2016-31	INDUCTOR MOLDED 56UH 145MA 5.7 OHM 10%	EA	4.00	DALE	IM-2 56UH 10%
					DELEVAN	1025-62
					JW MILLER	9230-62
					MIL SPEC	MS75085-04
					NYTRONICS	MD-56.0
					VANGUARD	15478
L2	19-2016-31	INDUCTOR MOLDED 56UH 145MA 5.7 OHM 10%	EA	-		
L3	19-2016-17	INDUCTOR MOLDED 3.9UH 263MA 1 OHM 10%	EA	1.00	DELEVAN	1025-34
L4	19-2016-14	INDUCTOR MOLDED 2.2UH 550MA .40 OHM 10%	EA	1.00	DALE	IM-2 2.2UH 10%
					DELEVAN	1025-28
					JW MILLER	9230-28
					MIL SPEC	MS75084-04
					NYTRONICS	MD-2.20
					VANGUARD	15461
L5	19-2016-06	INDUCTOR MOLDED .47UH 590MA .35 OHM 10%	EA	1.00	DELEVAN	1025-12
					JW MILLER	9230-12
					MIL SPEC	MS75083-09
					NYTRONICS	MD-0.47
					VANGUARD	15453
L6	19-2016-31	INDUCTOR MOLDED 56UH 145MA 5.7 OHM 10%	EA	-		
L7	19-2016-31	INDUCTOR MOLDED 56UH 145MA 5.7 OHM 10%	EA	-		
L8	19-2153-03	INDUCTOR MOLDED 10UH .44A .605 OHM 10%	EA	2.00	DALE	IM-6 10UH 10%
					MIL SPEC	MS75101-7
L9	19-2153-03	INDUCTOR MOLDED 10UH .44A .605 OHM 10%	EA	-		
P1	30-0213-00	CONN PLUG BULKHEAD FEMALE STRT	EA	1.00	APPLIED ENG PRO	3028-1541-010
P2	30-0243-01	CONN SMA PLUG STRT 50 OHM DC-18GHZ .086	EA	1.00	AMPHENOL	901-9723
Q1	07-0223-00	XSTR PNP 2N3906 PKG=TO92 TMP=M	EA	2.00	MOTOROLA	2N3906
Q2	07-0159-00	XSTR NPN 2N3904 PKG=TO92	EA	3.00	GE	2N3904
					MOTOROLA	2N3904
Q3	07-0223-00	XSTR PNP 2N3906 PKG=TO92 TMP=M	EA	-		
Q4	07-0159-00	XSTR NPN 2N3904 PKG=TO92	EA	-		
Q5	07-0159-00	XSTR NPN 2N3904 PKG=TO92	EA	-		
R1	RE-1050-24	RES SM 105 EW 1%	EA	2.00	KOA SPEER	RK73H2BTE 1050F
R2	RE-0619-24	RES SM 61.9 EW 1%	EA	1.00	KOA SPEER	RK73H2B 61R9F
R3	RE-1050-24	RES SM 105 EW 1%	EA	-		
R4	RE-0511-24	RES SM 51.1 EW 1%	EA	3.00	KOA SPEER	RK73H2BT 51R1F
R5	RE-0330-27	RES SM 33 EW 5%	EA	3.00	KOA SPEER	RM73H2BT 330J
R6	RE-0330-27	RES SM 33 EW 5%	EA	-		
R7	RE-0330-27	RES SM 33 EW 5%	EA	-		
R8	RE-0511-24	RES SM 51.1 EW 1%	EA	-		
R9	RE-2940-24	RES SM 294 EW 1%	EA	4.00	KOA SPEER	RK73H2BTE 2940F
R10	RE-0178-24	RES SM 17.8 EW 1%	EA	2.00	KOA SPEER	RM73H2BTE 17R8F
R11	RE-2940-24	RES SM 294 EW 1%	EA	-		
R12	RB-0301-33	RES CF 300 HW 5%	EA	2.00	BEC	B50J 300
R13	RB-0301-33	RES CF 300 HW 5%	EA	-		
R14	RE-0681-24	RES SM 68.1 EW 1%	EA	1.00	KOA SPEER	RK73H2BTE 68R1F
R15	RE-2940-24	RES SM 294 EW 1%	EA	-		
R16	RE-0178-24	RES SM 17.8 EW 1%	EA	-		
R17	RE-2940-24	RES SM 294 EW 1%	EA	-		

NAME: MODULATOR BOARD NAV-2000R ASSY NO: 20-5951-00

REVISION: 04 DATE: 04/25/2000

ITEM/ SYMBOL	JcAIR PART NO.	DESCRIPTION	U/M	QTY	MANUFACTURER	MANF'S P/N
R18	RE-0511-24	RES SM 51.1 EW 1%	EA	-		
R19	RB-0820-23	RES CF 82 QW 5%	EA	1.00	NIC	NCF25-82-B
R20	RC-4992-12	RES MF 49.9K EW 1%	EA	1.00	DALE	CMF-55 4992FT-1
					MIL SPEC	RN-55D 4992F
R21	RC-2002-12	RES MF 20K EW 1%	EA	3.00	DALE	CMF-55 2002FT-1
					MIL SPEC	RN-55D 2002F
R22	RC-1003-12	RES MF 100K EW 1%	EA	1.00	DALE	CMF-55 1003FT-1
					MIL SPEC	RN-55D 1003F
R23	RC-2002-12	RES MF 20K EW 1%	EA	-		
R24	RC-5492-12	RES MF 54.9K EW 1%	EA	1.00	DALE	CMF-55 5492FT-1
					MIL SPEC	RN-55D 5492F
R25	RB-0470-23	RES CF 47 QW 5%	EA	1.00	NIC	NCF25-47-B
R26	RC-1001-12	RES MF 1K EW 1%	EA	3.00	DALE	CMF-55 1001FT-1
					MIL SPEC	RN-55D 1001F
R27	RC-4991-12	RES MF 4.99K EW 1%	EA	2.00	DALE	CMF-55 4991FT-1
					MIL SPEC	RN-55D 4991F
R28	RC-7501-12	RES MF 7.5K EW 1%	EA	1.00	DALE	CMF-55 7501FT-1
					MIL SPEC	RN-55D 7501F
R29	RC-8251-12	RES MF 8.25K EW 1%	EA	1.00	DALE	CMF-55 8251FT-1
					MIL SPEC	RN-55D 8251F
R30	RB-0102-23	RES CF 1K QW 5%	EA	1.00	NIC	NCF25-1K-B
R31	RB-0103-23	RES CF 10K QW 5%	EA	8.00	NIC	NCF25-10K-B
R32	RC-2000-12	RES MF 200 EW 1%	EA	1.00	DALE	CMF-55 2000FT-1
					MIL SPEC	RN-55D 2000F
R33	RB-0222-23	RES CF 2.2K QW 5%	EA	1.00	NIC	NCF25-2.2K-B
R34	RB-0103-23	RES CF 10K QW 5%	EA	-		
R35	RB-0103-23	RES CF 10K QW 5%	EA	-		
R36	RB-0103-23	RES CF 10K QW 5%	EA	-		
R37	RC-1002-12	RES MF 10K EW 1%	EA	1.00	DALE	CMF-55 1002FT-1
					MIL SPEC	RN-55D 1002F
R38	RJ-0052-17	RES VR 20K 15T 10%	EA	1.00	ALLEN-BRADLEY	94P203
					BOURNS	3006P-1-203
R39	RJ-0052-15	RES VR 5K 15T 10%	EA	2.00	ALLEN-BRADLEY	94P502
					BOURNS	3006P-1-502
R40	RC-1001-12	RES MF 1K EW 1%	EA	-		
R41	RC-2002-12	RES MF 20K EW 1%	EA	-		
R42	RC-1001-12	RES MF 1K EW 1%	EA	-		
R43	RB-0471-23	RES CF 470 QW 5%	EA	1.00	NIC	NCF25-470-B
R44	RJ-0052-15	RES VR 5K 15T 10%	EA	-		
R45	RB-0103-23	RES CF 10K QW 5%	EA	-		
R46	RB-0103-23	RES CF 10K QW 5%	EA	-		
R47	RC-1433-12	RES MF 143K EW 1%	EA	1.00	DALE	CMF-55 1433FT-1
					MIL SPEC	RN-55D 1433F
R48	RC-2493-12	RES MF 249K EW 1%	EA	1.00	DALE	CMF-55 2493FT-1
					MIL SPEC	RN-55D 2493F
R49	RB-0334-23	RES CF 330K QW 5%	EA	1.00	NIC	NCF25-330K-B
R51	RB-0224-23	RES CF 220K QW 5%	EA	1.00	NIC	NCF25-220K-B

JcAIR INC.

NAME: MODULATOR BOARD NAV-2000R ASSY NO: 20-5951-00

REVISION: 04 DATE: 04/25/2000

ITEM/ SYMBOL	JcAIR PART NO.	DESCRIPTION	U/M	QTY	MANUFACTURER	MANF'S P/N
R52	RC-2491-12	RES MF 2.49K EW 1%	EA	1.00	DALE	CMF-55 2491FT-1
					MIL SPEC	RN-55D 2491F
R53	RB-0103-23	RES CF 10K QW 5%	EA	-		
R54	RB-0103-23	RES CF 10K QW 5%	EA	-		
R55	RB-0472-23	RES CF 4.7K QW 5%	EA	1.00	NIC	NCF25-4.7K-B
R56	RC-4991-12	RES MF 4.99K EW 1%	EA	-		
R57	RC-3162-12	RES MF 31.6K EW 1%	EA	1.00	DALE	CMF-55 3162FT-1
					MIL SPEC	RN-55D 3162F
R58	RB-0562-23	RES CF 5.6K QW 5%	EA	1.00	NIC	NCF25-5.6K-B
RT1	RK-0002-00	RES TH 2K 5%	EA	1.00	DALE	1C2001-5
U1	12-8054-01	IC 5209 LINEAR RF AMPLIFIER	EA	2.00	PHILIPS	NE5209D
U2	12-8054-01	IC 5209 LINEAR RF AMPLIFIER	EA	-		
U3	12-8181-00	IC 1678 MMIC AMPLIFIER PKG=SM08 TMP=I	EA	1.00	NEC	UPC1678G
U4	12-8484-01	IC MAR-4 MONO AMP 1000MHZ PKG=O(SM) TP=O	EA	1.00	MINI-CIRCUITS	MAR-4SM
U5	12-7846-00	IC 712 DUAL BIFET OP AMP PKG=P08 TMP=C	EA	1.00	ANALOG DEVICES	AD712JN
U6	12-7225-02	IC 393A DUAL COMPARATOR PKG=P08 TMP=C	EA	1.00	NATIONAL	LM393AN
U7	12-8247-00	IC 202 QUAD ANALOG SWITCH PKG=P16 TMP=C	EA	1.00	PMI	SW202GP
U8	12-8048-00	IC 5230 LOW VOLTAGE OP AMP PKG=P08 TMP=C	EA	1.00	SIGNETICS	NE5230N
U9	12-7911-00	IC 713 BIFET OP AMP PKG=P14 TMP=C	EA	1.00	ANALOG DEVICES	AD713JN
REF1	02-5951-00	SCHEMATIC MODULATOR BD NAV-2000R	EA	-		
REF2	25-5951-00	ASSY DWG MODULATOR BD NAV-2000R	EA	-		

REVISIONS			
REV	DESCRIPTION	DATE	APPROVED
1	UPDATE PER REV 1 ARTWORK	21DEC99	TRAUL
2	REVISE P2 ASSEMBLY INSTRUCTIONS	25APR00	JWILKINSON
3	CHANGE DRAWING NUMBER ON SHEET 2	3/14/01	

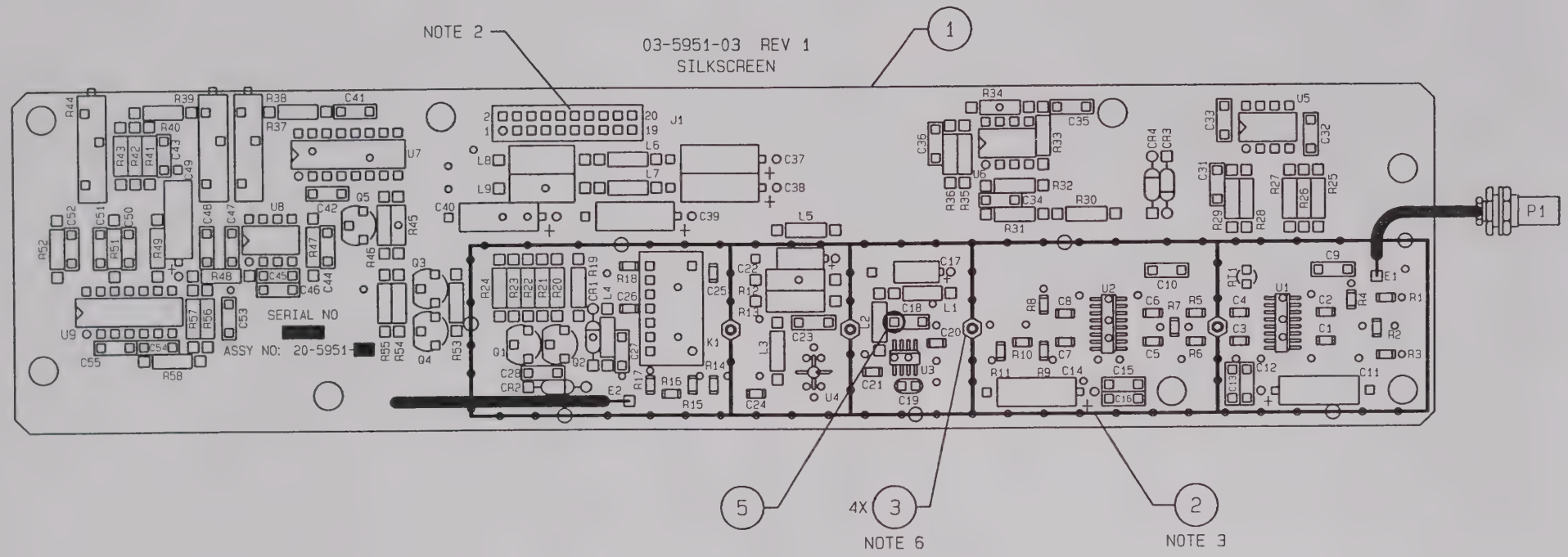

NOTES:

1. FOR COMPLETE ITEM DESCRIPTION REFERENCE BILL OF MATERIALS 20-5951-00.
2. INSTALL J1 FROM FARSIDE OF BOARD.
3. SOLDER FENCE TO BOARD WITH CONTINUOUS SOLDER BEAD.
4. SOLDER FROM CONDUCTOR END TO OUTER FENCE WALL WITH CONTINUOUS SOLDER BEAD.
5. ADD HEATSHRINK TUBING (ITEM 6) OVER OUTER COAX CONDUCTOR AS SHOWN.
6. SOLDER MODIFIED STANDOFFS (ITEM 3) TO FENCE IN LOCATIONS SHOWN.

20-5951-00	01-0520-XX
NEXT ASS'Y	USED ON
UNIT NAV2000R	

DIMENSIONS ARE IN INCHES
TOLERANCES ARE:
DECIMALS: .XX ± .01 .XXX ± 005
FRACTIONS: ± 1/64
ANGLES: ± 1/2 DEG

MATERIAL: FR4 .062 THK 1 OZ CU

FINISH: NA

BFGOODRICH AEROSPACE PROPRIETARY INFORMATION

APPROVALS	DATE
DRAWN NRH	22OCT92
CHECKED DWH	22FEB93
ISSUED	3/14/01
FILE NAME 595100R1.PCB	

BFGoodrich Aerospace
JcAIR Test Systems

400 NEW CENTURY PARKWAY
NEW CENTURY, KS 66031-0009 USA
PHONE (913) 764-2452
FAX (913) 782-5104

ASSEMBLY
RF MODULATOR

SIZE	CAGE NO	DWG NO	REV
B	41364	25-5951-00	3
			SHEET 1 OF 2

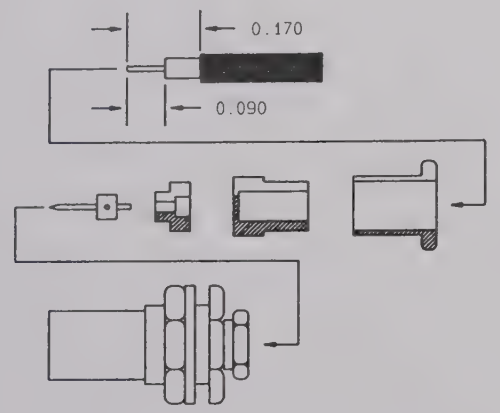

ASSEMBLY INSTRUCTIONS FOR P1

1) TRIM CABLE AS SHOWN.
2) SLIDE BACK NUT ONTO CABLE
3) SLIDE FERRULE OVER CABLE DIALECTRIC.
4) SOLDER FERRULE TO CABLE JACKET. DO NOT DISTRUB SOLDER JOINT UNTIL IT HAS COOLED.
5) INSTALL SMALL INSULATOR OVER CABLE DIALECTRIC.
6) SOLDER CONTACT TO CENTER CONDUCTOR.
7) INSERT CABLE ASSEMBLY INTO CONNECTOR BODY AND TIGHTEN TO 90 - 100 INCH OUNCES TORQUE.

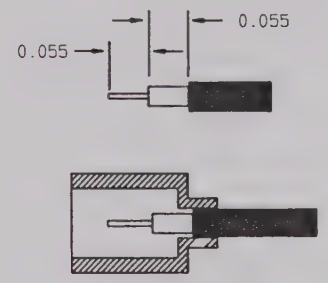

ASSEMBLY INSTRUCTIONS FOR P2

1) TRIM CABLE AS SHOWN.
2) PUSH WIRE INTO CONNECTOR.
3) SOLDER CONNECTOR BASE TO THE CABLE SLEEVING.

BEND INSTRUCTIONS FOR P1 CABLE

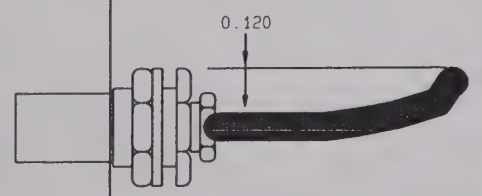

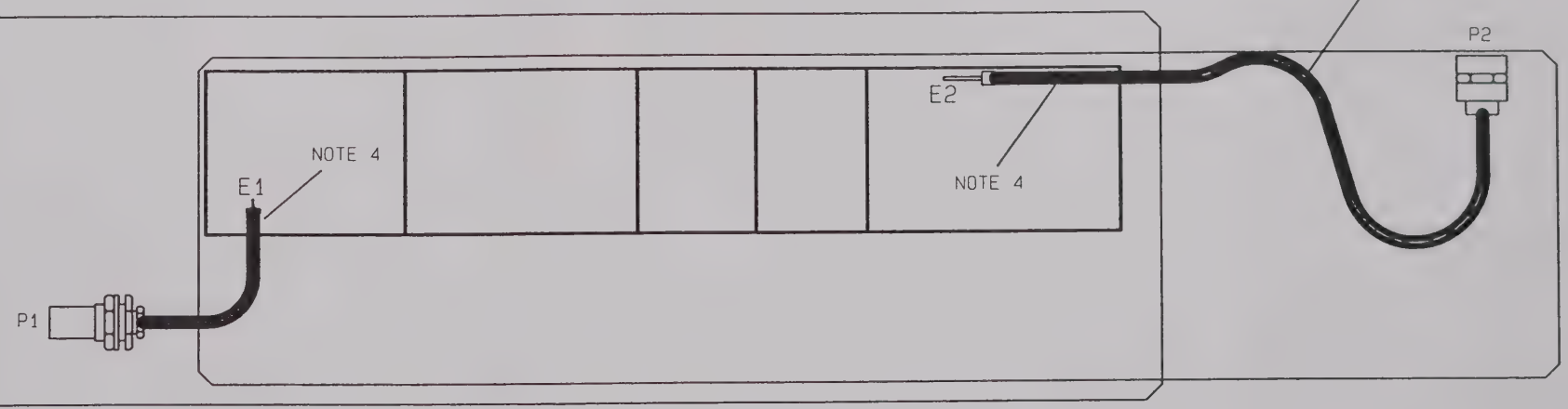

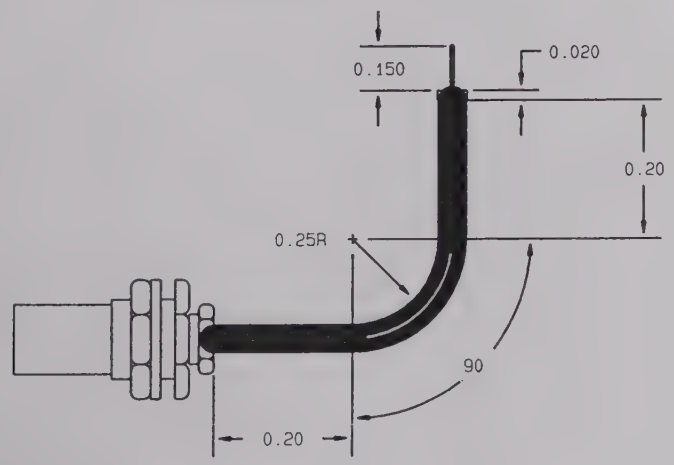

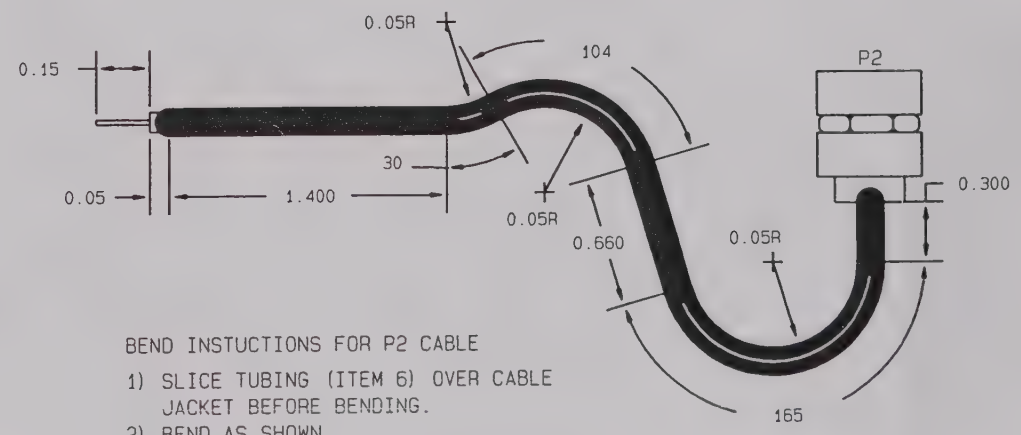

BEND INSTUCTIONS FOR P2 CABLE

1) SLICE TUBING (ITEM 6) OVER CABLE JACKET BEFORE BENDING.
2) BEND AS SHOWN.
3) TIN THE CABLE JACKET WITH SOLDER FROM LEFT END, 1.2 INCHES
4) TRIM DIALECTRIC AND CENTER LEAD AS SHOWN.
5) SHINK TUBING (ITEM 6).

SIZE	CAGE NO	DWG NO	REV
B	41364	25-5951-00	3
			SHEET 2 OF 2

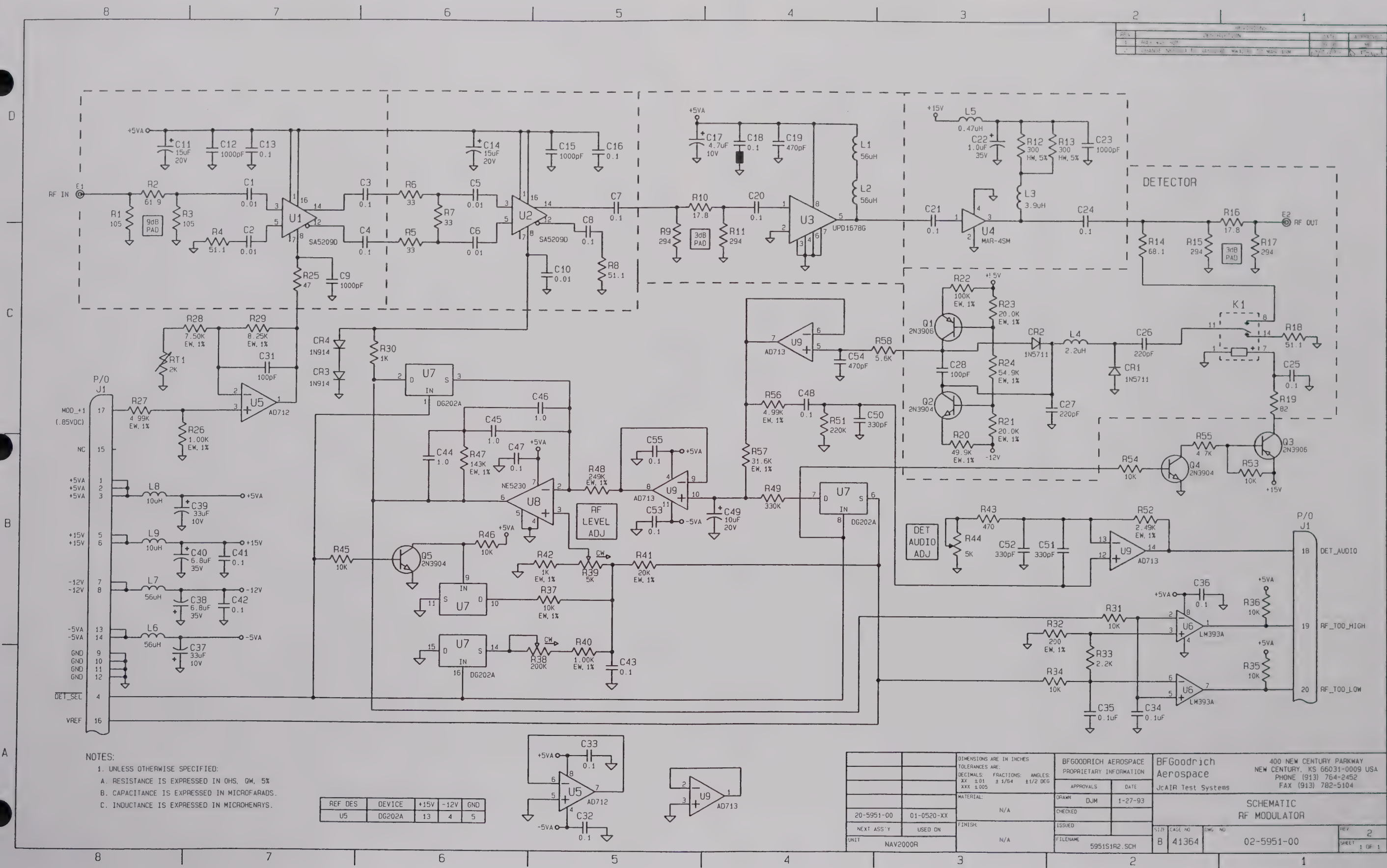

NOTES:

1. UNLESS OTHERWISE SPECIFIED:
   A. RESISTANCE IS EXPRESSED IN OHS, QW, 5%
   B. CAPACITANCE IS EXPRESSED IN MICROFARADS.
   C. INDUCTANCE IS EXPRESSED IN MICROHENRYS.

REF DES	DEVICE	+15V	-12V	GND
U5	DG202A	13	4	5

20-5951-00	01-0520-XX	DIMENSIONS ARE IN INCHES TOLERANCES ARE: DECIMALS: XX ±.01 XXX ±.005 FRACTIONS: ±1/64 ANGLES: ±1/2 DEG	BFGOODRICH AEROSPACE PROPRIETARY INFORMATION	BFGoodrich Aerospace JcAIR Test Systems	400 NEW CENTURY PARKWAY NEW CENTURY, KS 66031-0009 USA PHONE (913) 764-2452 FAX (913) 782-5104
NEXT ASS'Y	USED ON	MATERIAL: N/A	APPROVALS / DATE	SCHEMATIC RF MODULATOR	
UNIT NAV2000R		FINISH: N/A	DRAWN DJM 1-27-93	SIZE B	CAGE NO 41364
			CHECKED	DWG NO 02-5951-00	REV 2
			ISSUED		SHEET 1 OF 1
			FILENAME 5951S1R2.SCH		

JcAIR INC.

NAME: RPP RF BOARD NAV 2000R ASSY NO: 20-6156-00

REVISION: 00 DATE: 09/07/95

ITEM/ SYMBOL	JcAIR PART NO.	DESCRIPTION	U/M	QTY	MANUFACTURER	MANF'S P/N
1	09-6156-00	PCB RPP RF BD NAV 2000R	EA	1.00		
C101	CL-5103-31	CAP SM .01UF 100V 5% X7R	EA	1.00	KEMET	C1206C103J1RAC
C102	CL-5104-41	CAP SM .1UF 100V +/-10% X7R	EA	1.00	VITRAMON	VJ1206Y104KXBMB
CR101	07-6021-00	DIODE 1N5711	EA	2.00	HP	1N5711
CR102	07-6021-00	DIODE 1N5711	EA	-		
CR103	07-6133-01	DIODE PIN HMPS-3822 PKG=SO3 TMP=M	EA	4.00	HP	HSMP-3822
CR104	07-6133-01	DIODE PIN HMPS-3822 PKG=SO3 TMP=M	EA	-		
CR105	07-6133-01	DIODE PIN HMPS-3822 PKG=SO3 TMP=M	EA	-		
CR106	07-6133-01	DIODE PIN HMPS-3822 PKG=SO3 TMP=M	EA	-		
K101	32-0084-02	RELAY 2PDT 8.4-20 VOLT	EA	1.00	GENICOM	3SAV5004E1
R101	RE-0103-27	RES SM 10K EW 5%	EA	1.00	KOA SPEER	RM73B2B 103J
REF1	25-6156-00	ASSY DWG RPP RF BD NAV2000R	EA	-		
REF2	02-6157-00	SCHEMATIC CONTROL/RF BD NAV2000R	EA	-		

REVISIONS			
REV.	DESCRIPTION	DATE	APPROVED
01	RELEASE AS REV 01	5/94	RRN
02	SPLIT FROM 09-6156-00, UPDATE TITLE BLOCK	4/4/00	

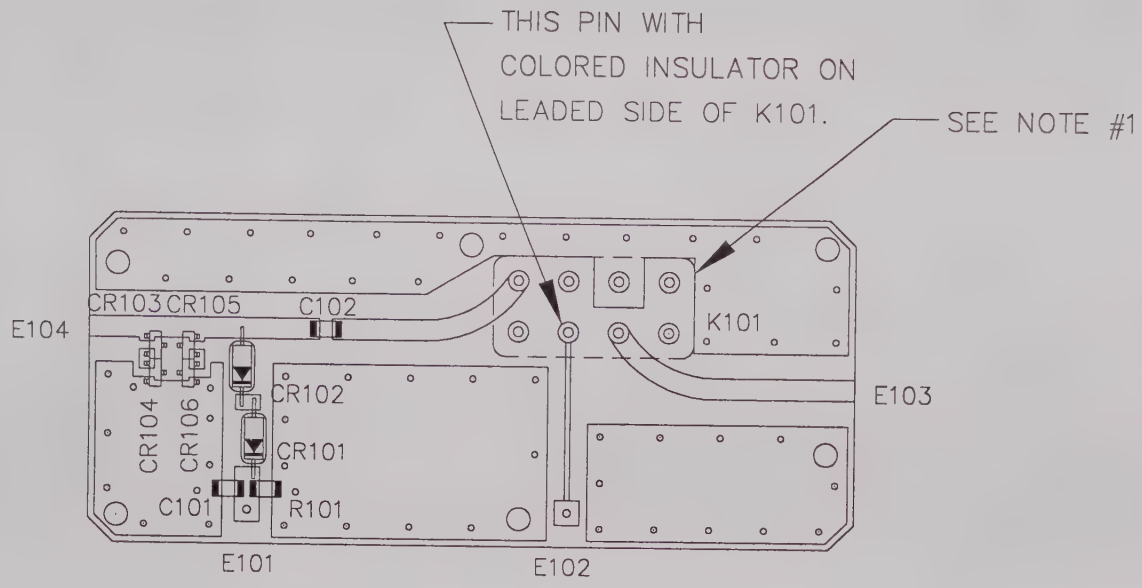

NOTES:

1. MOUNT K101 TO THE BACK SIDE OF THE BOARD & SOLDER CASE TO GROUND PLANE, ALL ROUND.
2. THE 50 OHM TRACES ARE .082 WIDE.
3. USE ROSIN CORE SOLDER ONLY. (NO WATER SOLUABLE FLUX)

20-6156-00	01-0520-50
NEXT ASS'Y	TOP BILL
UNIT: NAV 2000	

DIMENSIONS ARE IN INCHES
TOLERANCES ARE:
DECIMALS: .XX ±.01 .XXX ±.005
FRACTIONS: ± 1/64
ANGLES: ± 1/2°

MATERIAL:

FINISH:

BFGOODRICH AEROSPACE
PROPRIETARY INFORMATION

APPROVALS	DATE
DRAWN RRN	5/94
ENG. —	
ISSUED L. Huffman	4/6/00

FILE NAME: 09615600.DWG

BFGoodrich Aerospace
JcAIR Test Systems
400 NEW CENTURY PARKWAY
NEW CENTURY, KS 66031-0009 USA
PHONE (913) 764-2452
FAX (913) 782-5104

RPP RF BD
NAV 2000

SIZE	CAGE NO.	DWG. NO.	REV.
A	41364	25-6156-00	02

SHEET 1 of 1

05-0019-01

JcAIR INC.

NAME: RPP CONTROL BOARD NAV 2000R ASSY NO: 20-6157-00

REVISION: 00 DATE: 09/07/95

ITEM/ SYMBOL	JcAIR PART NO.	DESCRIPTION	U/M	QTY	MANUFACTURER	MANF'S P/N
1	09-6157-00	PCB RPP CONTROL BD NAV 2000R	EA	1.00		
C1	CB-0156-23	CAP TN 15 UF 20V 10%	EA	2.00	KEMET	T352F156K020AS
C2	CB-0156-23	CAP TN 15 UF 20V 10%	EA	-		
C3	CE-0103-16	CAP DP .01UF 50V 10% Z5U	EA	7.00	SPRAGUE	923CZ5U103M050B
C4	CE-0103-16	CAP DP .01UF 50V 10% Z5U	EA	-		
C5	CE-0103-16	CAP DP .01UF 50V 10% Z5U	EA	-		
C6	CE-0104-26	CAP DP .1UF 50V 20% Z5U	EA	1.00	SPRAGUE	923CZ5U104M050B
C7	CE-0103-16	CAP DP .01UF 50V 10% Z5U	EA	-		
C8	CE-0103-16	CAP DP .01UF 50V 10% Z5U	EA	-		
C9	CE-0103-16	CAP DP .01UF 50V 10% Z5U	EA	-		
C10	CE-0103-16	CAP DP .01UF 50V 10% Z5U	EA	-		
C11	CH-0103-00	CAP CK .01UF 50V 10%	EA	1.00	MALLORY	CK05BX103K
CR1	07-5081-02	DIODE ZENER 1N5230B 4.7V 500MW PKG=DO-35	EA	1.00	PHILIPS COMP	1N5230B
CR2	07-6058-00	DIODE REC 1N4001 PKG=DO41	EA	1.00	MOTOROLA	1N4001
					RCA	1N4001
J1	30-5042-00	CONN D MALE 9 PIN RT ANG 1000PF PI	EA	1.00	SPECTRUM	56-702-003
L1	19-2155-13	INDUCTOR MOLDED 47UH 170MA 2.75 OHM 5%	EA	1.00	DALE	IM-4 47UH 5%
					MIL SPEC	MS90538-04
L2	19-2016-34	INDUCTOR MOLDED 100UH 125MA 8.0 OHM 10%	EA	1.00	DALE	IM-2 100UH 10%
					DELEVAN	1025-68
					JW MILLER	9230-68
					MIL SPEC	MS75085-07
					NYTRONICS	MD-100
					VANGUARD	15481
Q1	07-0159-00	XSTR NPN 2N3904 PKG=TO92	EA	1.00	GE	2N3904
					MOTOROLA	2N3904
Q2	07-0223-00	XSTR PNP 2N3906 PKG=TO92 TMP=M	EA	1.00	MOTOROLA	2N3906
R1	RE-0102-27	RES SM 1K EW 5%	EA	2.00	DALE	CRCW1206-102JB
					KOA SPEER	RM73B2B 102J
R2	RE-0272-27	RES SM 2.7K EW 5%	EA	1.00	KOA SPEER	RM73B2BT 272J
R3	RE-0332-27	RES SM 3.3K EW 5%	EA	1.00	KOA SPEER	RK73B2BT 332J
R4	RE-0222-27	RES SM 2.2K EW 5%	EA	1.00	KOA SPEER	RM73B2B 222J
R5	RE-0472-27	RES SM 4.7K EW 5%	EA	1.00	KOA SPEER	RM73B2B 472J
R6	RE-0102-27	RES SM 1K EW 5%	EA	-		
R7	RE-0390-27	RES SM 39 EW 5%	EA	1.00	KOA SPEER	RM73B2BT 390J
R8	RE-0103-27	RES SM 10K EW 5%	EA	1.00	KOA SPEER	RM73B2B 103J
U1	12-7720-00	IC 1016 COMPARATOR PKG=P08 TMP=C V=5	EA	1.00	LINEAR TECH	LT1016CN
U2	12-7470-00	IC 74HCT74 DUAL FLIP/FLOP PKG=P14 TMP=O	EA	1.00	NATIONAL	MM74HCT74
					RCA	CD74HCT74
					SIGNETICS	74HCT74N
					SSS	SS74HCT74
U3	12-7612-01	IC 78L05 REGULATOR PKG=TO92 TMP=O V=5	EA	1.00	NATIONAL	LM78L05ACZ
U4	12-7587-00	IC 79L05 REGULATOR PKG=TO92 TMP=C V=5	EA	1.00	NATIONAL	LM79L05ACZ
REF1	25-6157-00	ASSY DWG RPP CONTROL BD NAV2000R	EA	-		
REF2	02-6157-00	SCHEMATIC CONTROL/RF BD NAV2000R	EA	-		

PROPRIETARY NOTICE
THIS DOCUMENT IS PROPRIETRY TO JcAIR INC.
AND IS NOT TO BE REPRODUCED OR OTHERWISE
DISSEMINATED WITHOUT THE WRITTEN PERMISSION
OF JcAIR INC.

REVISIONS			
REV	DESCRIPTION	DATE	APPROVED
1	UPDATE PER REV 1 ARTWORK	07sep95	M EDWARDS

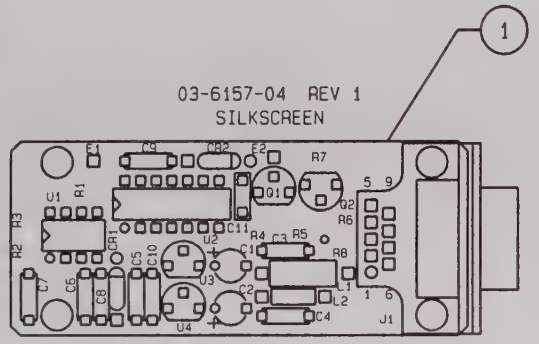

NOTES:
1. FOR COMPLETE ITEM DESCRIPTION REFERENCE BILL OF MATERIALS 20-6157-00.

	QTY REQD	FSCM NO.	PART OR IDENTIFYING NO.	NOMENCLATURE OR DESCRIPTION	MATERIAL SPECIFICATION	

PARTS LIST

UNLESS OTHERWISE SPECIFIED DIMENSIONS ARE IN INCHES
TOLERANCES ARE:
FRACTIONS ± | DECIMALS .XX ± .XXX | ANGLES ±

CONTRACT NO.

JcAIR INC.
400 INDUSTRIAL PARKWAY
INDUSTRIAL AIRPORT, KS USA 66031

APPROVALS	DATE
DRAWN NRH	5-31-94
CHECKED ME	11-17-94
ISSUED	

MATERIAL

FINISH

RPP CONTROL BOARD

SIZE	FSCM NO.	DWG. NO.	REV.
A	41364	25-6157-00	1

NEXT ASSY	USED ON
	NAV2000R

APPLICATION

DO NOT SCALE DRAWING

FILE: 615700R1.PCB

SCALE 1:1 | UNIT: NAV2000R | SHEET 1 OF 1

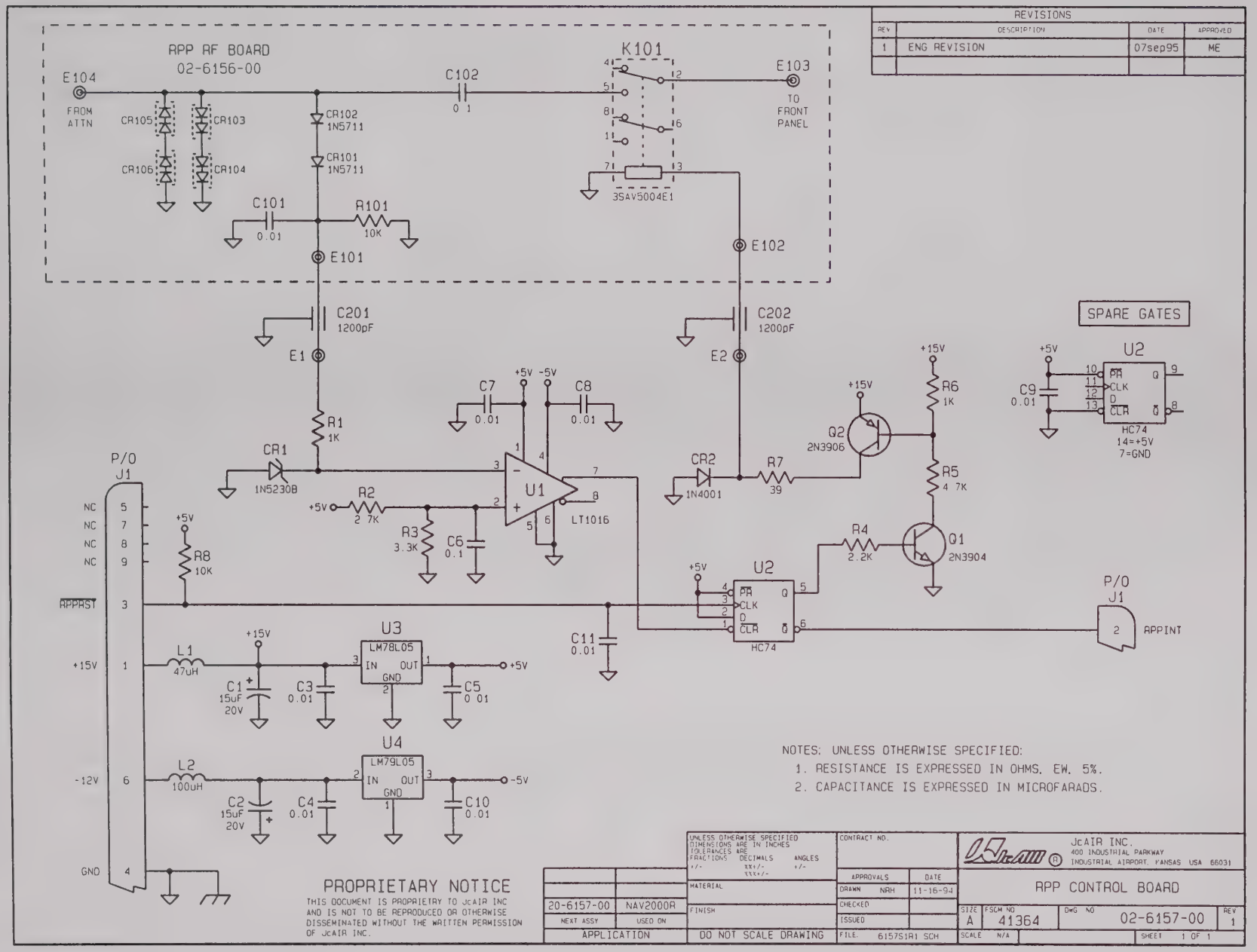
REVISIONS
REV | DESCRIPTION | DATE | APPROVED
1 | ENG REVISION | 07sep95 | ME
RPP RF BOARD
02-6156-00
E104
FROM ATTN
CR105
CR103
CR106
CR104
CR102 1N5711
CR101 1N5711
C101 0.01
R101 10K
E101
C102 0.1
K101
3SAV5004E1
E103
TO FRONT PANEL
E102
C201 1200pF
E1
C202 1200pF
E2
SPARE GATES
U2
HC74
14=+5V
7=GND
C9 0.01
C7 0.01
C8 0.01
R1 1K
CR1 1N5230B
U1
LT1016
R2 2.7K
R3 3.3K
C6 0.1
CR2 1N4001
R7 39
Q2 2N3906
R6 1K
R5 4.7K
R4 2.2K
Q1 2N3904
C11 0.01
P/O J1
NC 5
NC 7
NC 8
NC 9
APPRST 3
+15V 1
-12V 6
GND 4
R8 10K
L1 47uH
U3 LM78L05
C1 15uF 20V
C3 0.01
C5 0.01
L2 100uH
U4 LM79L05
C2 15uF 20V
C4 0.01
C10 0.01
APPINT
NOTES: UNLESS OTHERWISE SPECIFIED:
1. RESISTANCE IS EXPRESSED IN OHMS, EW, 5%.
2. CAPACITANCE IS EXPRESSED IN MICROFARADS.
PROPRIETARY NOTICE
THIS DOCUMENT IS PROPRIETARY TO JcAIR INC AND IS NOT TO BE REPRODUCED OR OTHERWISE DISSEMINATED WITHOUT THE WRITTEN PERMISSION OF JcAIR INC.
UNLESS OTHERWISE SPECIFIED DIMENSIONS ARE IN INCHES TOLERANCES ARE FRACTIONS DECIMALS ANGLES
CONTRACT NO.
APPROVALS DATE
DRAWN NRH 11-16-94
CHECKED
ISSUED
MATERIAL
FINISH
20-6157-00 NAV2000R
NEXT ASSY USED ON
APPLICATION
DO NOT SCALE DRAWING
FILE: 6157S1R1.SCH
JcAIR INC.
400 INDUSTRIAL PARKWAY
INDUSTRIAL AIRPORT, KANSAS USA 66031
RPP CONTROL BOARD
SIZE A
FSCM NO 41364
DWG NO 02-6157-00
REV 1
SCALE N/A
SHEET 1 OF 1

JcAIR INC.

NAME: SYNTHESIZER ASSY NAV 2000R ASSY NO: 20-9520-52

REVISION: 06 DATE: 05/24/2002

ITEM/ SYMBOL	JcAIR PART NO.	DESCRIPTION	U/M	QTY	MANUFACTURER	MANF'S P/N
1	76-3502-00	MODULE 1 NAV 2000R	EA	1.00	JCAIR	76-3502-00
2	76-3502-02	DIGITAL COVER	EA	1.00	JCAIR	76-3502-02
3	76-3502-01	RF COVER	EA	1.00	JCAIR	76-3502-01
4	47-2089-58	PLATE NAV 2000R	EA	1.00	JCAIR	47-2089-58
5	17-0028-00	FILTER EMI FEEDTHRU LOW PASS 100PF 10A	EA	9.00	MURATA	9900-381-6020
					SCI TECHNOLOGY	9110-101
					TUSONIX	4400-030
6	89-3102-06	SCREW FHP #2-56 X .375 SS 100 DEG	EA	2.00		
7	89-2102-04	SCREW PHP #2-56 X .250	EA	23.00	MIL SPEC	MS51957-3
8	89-3104-03	SCREW FHP #4-40 X .188 SS 100 DEG	EA	6.00	MIL SPEC	MS24693C-1
9	89-0902-00	WASHER LOCK #2	EA	25.00	MIL SPEC	MS35338-134
10	89-2104-04	SCREW PHP #4-40 X .250 STAINLESS	EA	32.00	MIL SPEC	MS51957-13
11	89-0904-00	WASHER LOCK #4	EA	34.00	MIL SPEC	MS35338-135
					MIL SPEC	MS35338-78
12	30-0042-03	CONN BNC JAMNUT	EA	2.00	AMP	1-329631-2
13	89-3102-03	SCREW FHP #2-56 X .188 SS 100 DEG	EA	89.00	NATIONAL AERO	NAS662C2R3
15	90-0397-02	CONTACT STRIP COPPER .23 X 2FT TIN LEAD	EA	1.00	INSTRUMENT SPEC	0097-0550-07
16	89-3104-05	SCREW FHP #4-40 X .312 SS 100 DEG	EA	4.00	MIL SPEC	MS24693C-3
17	89-2104-03	SCREW PHP #4-40 X .188 STAINLESS	EA	2.00	MIL SPEC	MS51957-12
18	76-3502-04	CLAMP RF STRIPLINE NAV2000R	EA	1.00	JCAIR	76-3502-04
19	89-2102-12	SCREW PHP #2-56 X .750 STAINLESS	EA	2.00	MIL SPEC	MS51957-9
20	89-0102-00	WASHER FLAT #2 .150 OD (SML PAT)	EA	25.00	NATIONAL AERO	NAS620C2
21	89-0104-00	WASHER FLAT #4 .214 OD	EA	32.00	NATIONAL AERO	NAS620C4L
22	76-3502-05	SPACER TOP COVER NAV2000R SYNTHSZR ASSY	EA	1.00	JCAIR	76-3502-05
23	10-0023-02	INSULATOR XSTR TO-220 .750 X .500 .125HL	EA	1.00	EG&G WAKEFIELD	173-9-230-P
					SPC	1200-09FG-58
24	10-0020-07	INSULATOR BUSHING .210 OD .116 ID NYLON	EA	1.00	KEYSTONE	3049
					SEASTROM	5607-152
A1	20-5852-10	SYNTHESIZER BD NAV 2000	EA	1.00	JCAIR	20-5852-10
A2	20-5868-00	RF OUTPUT BOARD NAV 2000R	EA	1.00	JCAIR	20-5868-00
A3	20-5867-00	MAIN VCO BOARD NAV 2000	EA	1.00	JCAIR	20-5867-00
A4	20-5866-00	400 MHZ VCO BOARD NAV 2000R	EA	1.00	JCAIR	20-5866-00
REF1	25-9520-52	ASSY DWG SYNTHESIZER MODULE NAV 2000R	EA	-		
REF2	02-9520-52	SCHEMATIC SYNTHESIZER NAV 2000R	EA	-		
REF3	40-9520-52	BLOCK DIAGRAM SYNTHESIZER BLK NAV 2000R	EA	-		
REF4	04-9520-52	TEST PROCEDURE NAV 2000R SYNTHESIZER	EA	-		

REVISIONS			
REV.	DESCRIPTION	DATE	APPROVED
1	REMOVE NOTE 1; CORRECT E NOS. ON A3; NEW TTL BLK	03/31/99	S KRATZBERG
2	ADD FLAT WASHERS TO PCB SCREWS, ADD ITEM 18	4MAY00	D. TRAUL
3	ADDED ITEM 22 TO ASSEMBLY DRAWING	01/08/00	L JOY
4	ADD NODE 3	5-22-00	LSJ

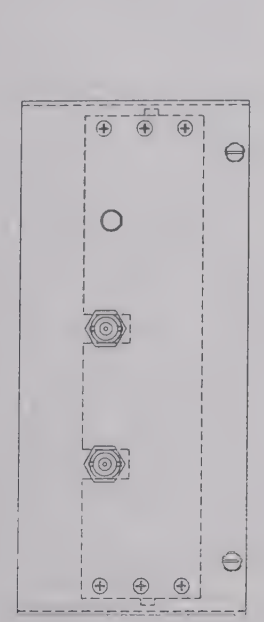

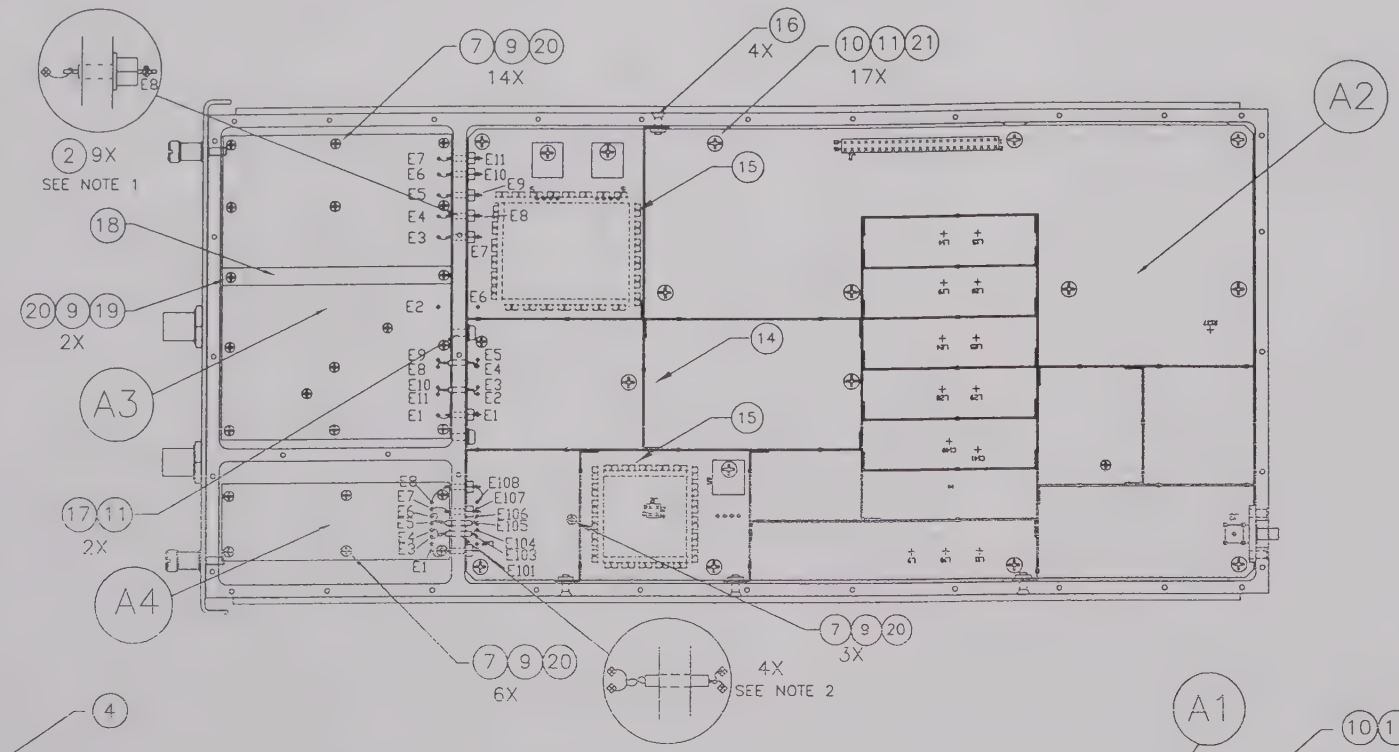

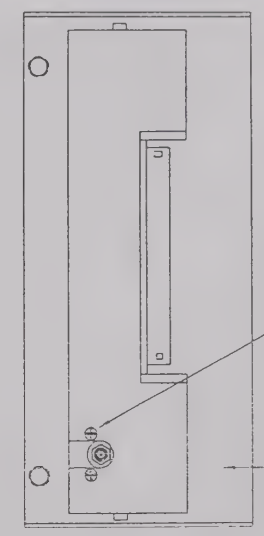

6 2X

ITEM (3) NOT SHOWN THIS VIEW
NOT SHOWN ITEM (13) 58X

4

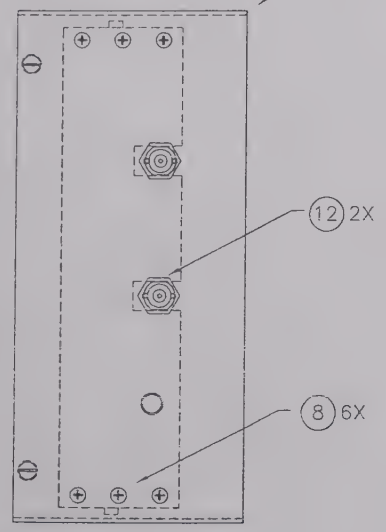

12 2X

8 6X

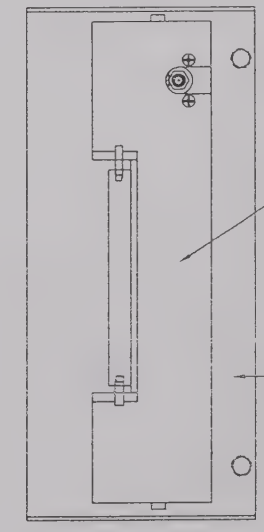

1

NOT SHOWN – COVER ITEM (2)
AND ITEM (13) 31X

NOTES:

1. WIRE FROM FEED THRU TO BOARDS USING AWG #26 BUSS WIRE
2. WIRE FROM BOARD TO BOARD USING A TWISTED PAIR MADE OF AWG #26 MAG WIRE TWISTED 12 TURNS PER INCH TWISTED PAIR MUST BE PLACED WITHIN TEFLON TUBING PRIOR TO PLACEMENT WITHIN MODULE WALL.
3. INSTALL ITEMS 23 AND 24 AT U26.

20-9520-52	01-0520-XX
NEXT ASS'Y	TOP BILL
UNIT: NAV 2000R	

DIMENSIONS ARE IN INCHES
TOLERANCES ARE:
DECIMALS: .XX ±.01 .XXX ±.005
FRACTIONS: ± 1/64
ANGLES: ± 1/2°
MATERIAL:
FINISH:

GOODRICH CORPORATION
PROPRIETARY INFORMATION

APPROVALS	DATE
DRAWN DWH	12/09/92
ENG. D TRAUL	5/15/00
ISSUED S HUFFMAN	5/26/00
FILE NAME 25952052.DWG	

GOODRICH
JCAIR TEST SYSTEMS
GOODRICH CORPORATION
400 NEW CENTURY PKWY
NEW CENTURY, KS 66031-0009 USA
PHONE: (913) 764-2452
FAX: (913) 782-5104

ASSEMBLY SYNTHEISIZER

SIZE	CAGE NO.	DWG. NO.	REV
B	41364	25-9520-52	04

SHEET 1 of 1

05-0019-02

REVISIONS			
REV.	DESCRIPTION	DATE	APPROVED
1	CORRECT ERRORS	07/25/94	B.P.
2	REMV CONNS FROM A2-E6 &E102 TO A3-E2 & A4-E2	05/18/99	

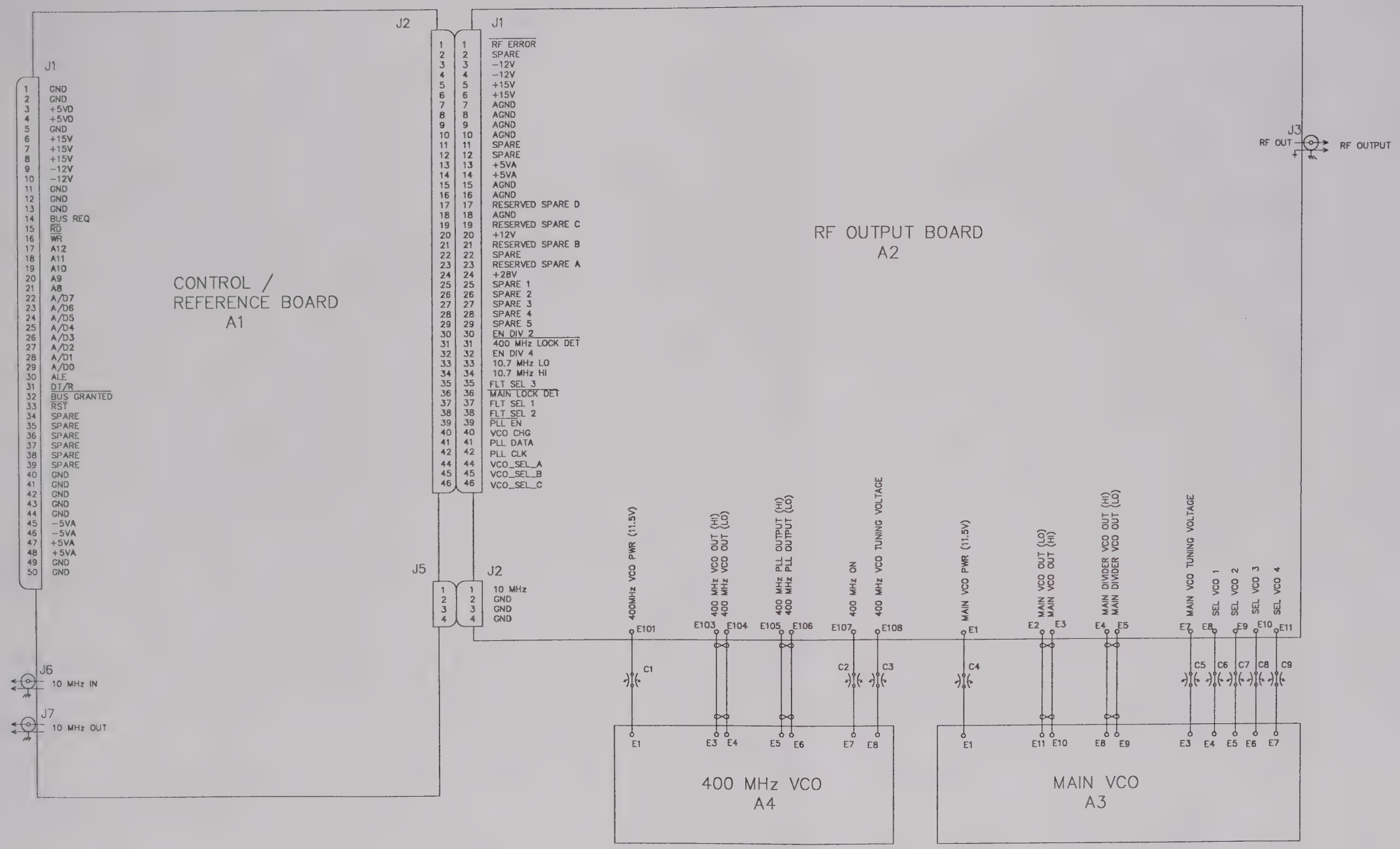

20-9520-52	01-0520-50
NEXT ASS'Y	TOP BILL
UNIT	NAV 2000R

DIMENSIONS ARE IN INCHES
TOLERANCES ARE:
DECIMALS: .XX ±.01 .XXX ±.005
FRACTIONS: ± 1/64
ANGLES: ± 1/2°
MATERIAL: –
FINISH: –

BFGOODRICH AEROSPACE PROPRIETARY INFORMATION

APPROVALS	DATE
DRAWN DWH	01/11/92
ENG.	
ISSUED	
FILE NAME 02952052.DWG	

BFGoodrich Aerospace
JcAIR Test Systems
400 NEW CENTURY PARKWAY
NEW CENTURY, KS 66031-0009 USA
PHONE (913) 764-2452
FAX (913) 782-5104

SCHEMATIC SYNTHESIZER

SIZE	CAGE NO.	DWG. NO.	REV.
B	41364	02-9520-52	02
			SHEET 1 of 1

05 0019 02

ITEM	QTY REQD	PART OR IDENTIFYING NO.	NOMENCLATURE OR DESCRIPTION	MATERIAL SPECIFICATION
PARTS LIST				

CONTRACT NO.	UNLESS OTHERWISE SPECIFIED DIMENSIONS ARE IN INCHES TOLERANCES DECIMALS ANGLES FRACTIONS .XX± .01 ± 1/2° .XXX± .005
APPROVALS	MATERIAL
DATE	FINISH
DRAWN DWH 1/7/93	
CHECKED	
ISSUED	

jCAIR INC
400 INDUSTRIAL PKWY, INDUSTRIAL AIRPORT, KS 66031

SYNTHESIZER BLOCK DIAGRAM

SIZE	FSCM NO.	DWG. NO.	REV.
B	41364	40-9520-52	2

SCALE N/A | UNIT | NAV 2000R | SHEET 1 OF 1

APPLICATION	
NEXT ASSY	USED ON

JCAIR PROPRIETARY INFORMATION

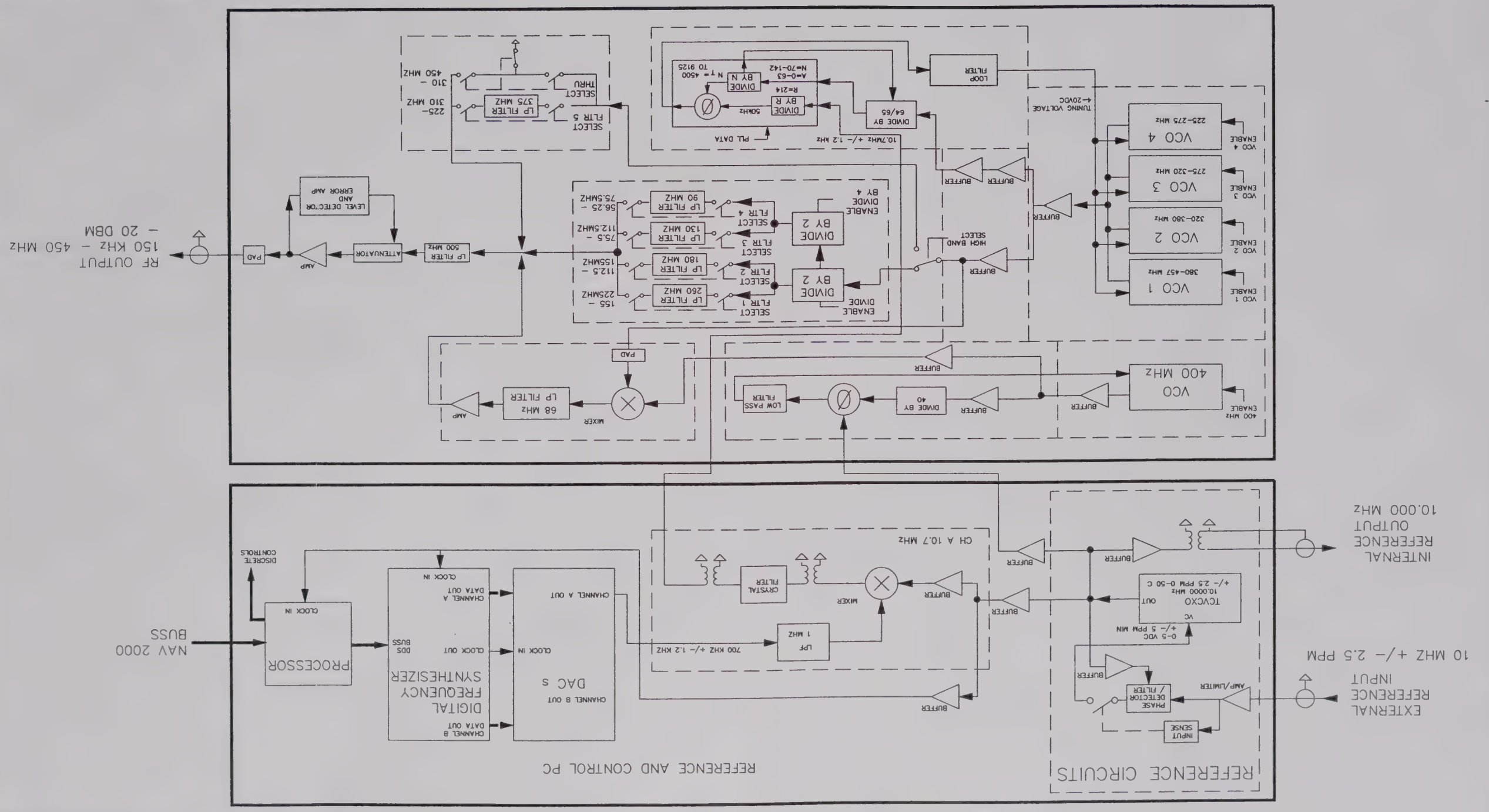

REVISIONS			
REV	DESCRIPTION	DATE	APPROVED
1	MISC CORRECTION	4/8/94	SN
2	CHNG VCO 2 TO 320-380 MHz	7/22/94	BE

JcAIR INC.

NAME: POWER SUPPLY ASSY

ASSY NO: 20-9520-53

REVISION: 01

DATE: 07/29/1997

ITEM/ SYMBOL	JcAIR PART NO.	DESCRIPTION	U/M	QTY	MANUFACTURER	MANF'S P/N
1	47-2089-06	BRACKET POWER SUPPLY NAV 2000R	EA	1.00	JCAIR	47-2089-06
3	30-9012-01	CONTACT SOCKET CRIMP 18-24 AWG	EA	7.00	MOLEX	39-00-0164
4	90-0432-00	CABLE MOUNT 1.13 X 1.13 ADHESIVE BACKED	EA	1.00	PANDUIT	ABMS-A
5	90-0018-01	CABLE TIE NYLON .87 BUNDLE MAX 100 PC	EA	1.00	PANDUIT	PLT1M-C
P2	30-1983-12	CONN HOUSING DBL ROW 12 POS	EA	1.00	MOLEX	39-01-2125
PS1	15-0266-00	POWER SUPPLY TRPL OUTPUT 5V/3A 12V/1A	EA	1.00	POWER ONE	HBAA-40W-A
REF1	25-9520-53	ASSY DWG POWER SUPPLY ASSEMBLY	EA	-		
REF2	02-9520-53	SCHEMATIC POWER SUPPLY NAV 2000R	EA	-		

REVISIONS			
REV.	DESCRIPTION	DATE	APPROVED
1	WIRING CHANGES	07/23/97	MP
2	REMOVE 1 WIRE	01/08/01	

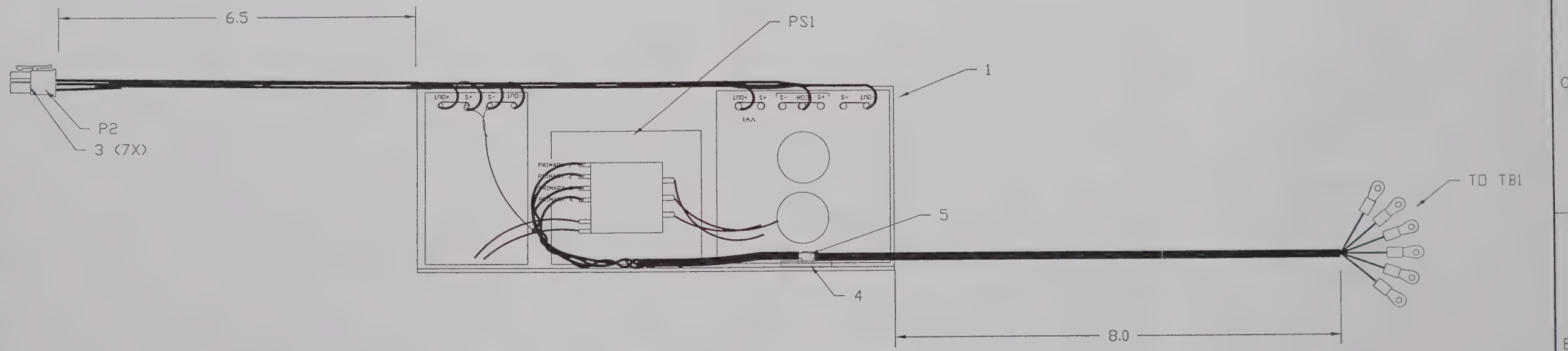

NOTES:

WHEN INSTALLING PS1

1. USE ALL HARDWARE OF PS1, SCREWS, NUTS , AND INSULATORS
2. REMOVE ALL JUMPERS BETWEEN TRANSFORMER PRIMARY LEADS
3. REMOVE JUMPER VW1 FOR +15V OPERATION

20-9520-50	01-0520-XX
NEXT ASS'Y	TOP BILL
UNIT	NAV 2000R

DIMENSIONS ARE IN INCHES
TOLERANCES ARE:
DECIMALS: .XX ±.01 .XXX ±.005 FRACTIONS: ± 1/64 ANGLES: ± 1/2°

MATERIAL: –

FINISH: –

BFGOODRICH AEROSPACE PROPRIETARY INFORMATION

APPROVALS	DATE
DRAWN DWH	12/1/92
ENG.	
ISSUED	

FILE NAME 25952053.DWG

BFGoodrich Aerospace
JcAIR Test Systems
400 NEW CENTURY PARKWAY
NEW CENTURY, KS 66031-0009 USA
PHONE (913) 764-2452
FAX (913) 782-5104

POWER SUPPLY ASSEMBLY

SIZE	CAGE NO.	DWG. NO.	REV.
B	41364	25-9520-53	02

SHEET 1 of 1

05-0019-02

REVISIONS			
REV.	DESCRIPTION	DATE	APPROVED
1	SWAP PRIMARIES 1 & 4	2/94	T.R.
2	WIRING CHANGES; REMOVED PS1 OUTLINE	07/23/97	MP
3	REMOVED WIRE FROM PRIMARY 5	01/08/01	L. Joy

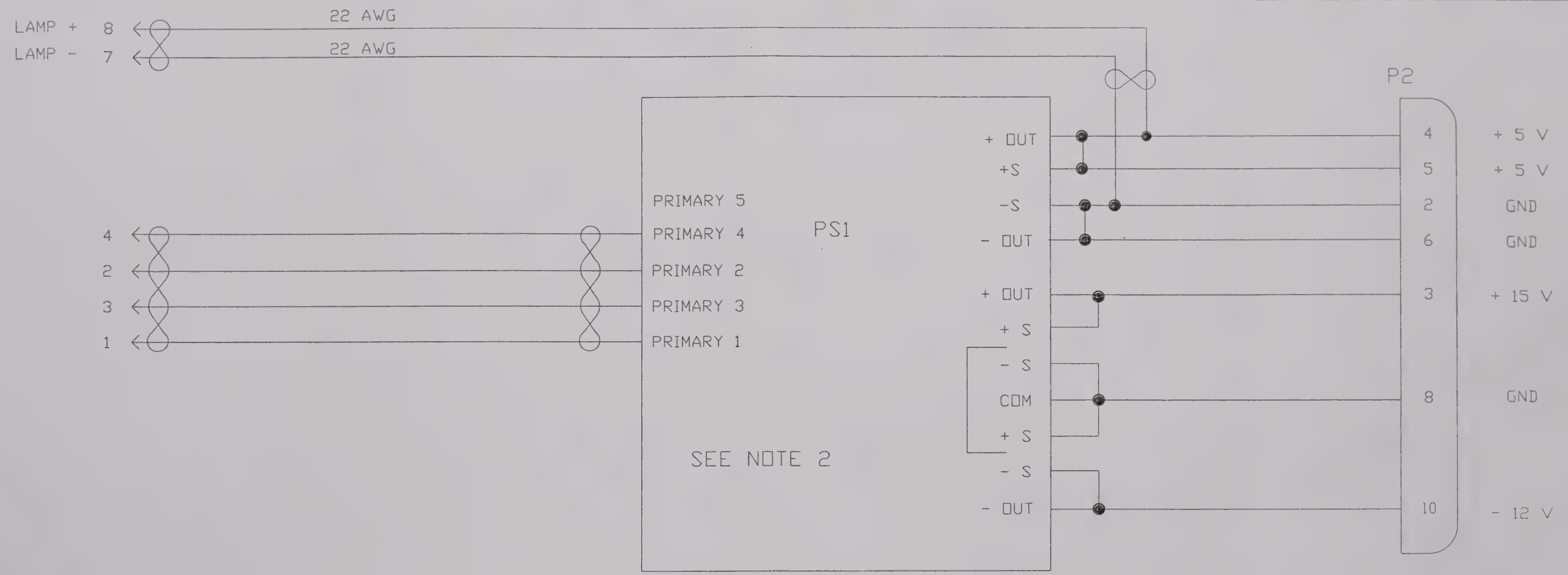

NOTES:

1. ALL WIRE IS 18 AWG UNLESS OTHERWISE SPECIFIED.
2. WHEN INSTALLING PS1:
   REMOVE JUMPER VW1 FOR +15V OPERATION.
   REMOVE ALL JUMPERS BETWEEN TRANSFORMER PRIMARY LEADS

20-9520-50	01-0520-XX
NEXT ASS'Y	TOP BILL
UNIT: NAV 2000R	

DIMENSIONS ARE IN INCHES
TOLERANCES ARE:
DECIMALS: .XX ±.01 .XXX ±.005 FRACTIONS: ± 1/64 ANGLES: ± 1/2°

MATERIAL: –

FINISH: –

BFGOODRICH AEROSPACE PROPRIETARY INFORMATION

APPROVALS	DATE
DRAWN DWH	11/19/92
ENG.	
ISSUED	

FILE NAME: 02952053.DWG

BFGoodrich Aerospace
JcAIR Test Systems
400 NEW CENTURY PARKWAY
NEW CENTURY, KS 66031-0009 USA
PHONE (913) 764-2452
FAX (913) 782-5104

POWER SUPPLY

SIZE	CAGE NO.	DWG. NO.	REV.
B	41364	02-9520-53	03

SHEET 1 of 1

05-0018-02

JcAIR INC.

NAME: CARD CAGE ASSY NAV2000R

ASSY NO: 20-9520-54

REVISION: 01

DATE: 01/24/2001

ITEM/ SYMBOL	JcAIR PART NO.	DESCRIPTION	U/M	QTY	MANUFACTURER	MANF'S P/N
1	47-2089-11	CARD CAGE BOTTOM NAV 2000R	EA	1.00	JCAIR	47-2089-11
2	47-2089-10	CARD CAGE TOP NAV 2000R	EA	1.00	JCAIR	47-2089-10
3	76-3500-03	CARD CAGE SUPPORT BAR NAV 2000R	EA	4.00	JCAIR	76-3500-03
4	89-3102-03	SCREW FHP #2-56 X .188 SS 100 DEG	EA	16.00	NATIONAL AERO	NAS662C2R3
5	76-3500-02	CARD CAGE MODULE GUIDE NAV 2000R	EA	4.00	JCAIR	76-3500-02
6	89-3104-06	SCREW FHP #4-40 X .375 SS 100 DEG	EA	32.00	MIL SPEC	MS24693C-4
7	47-1852-17	SPACER CARD GUIDE NAV 2000	EA	6.00	JCAIR	47-1852-17
8	90-1010-17	CARD GUIDE 11 INCH 9.031 MNTG DIM	EA	6.00	BIVAR	E-1100
9	76-3500-05	CARD CAGE SIDE NAV 2000R	EA	2.00	JCAIR	76-3500-05
10	89-2102-04	SCREW PHP #2-56 X .250	EA	20.00	MIL SPEC	MS51957-3
11	89-0902-00	WASHER LOCK #2	EA	20.00	MIL SPEC	MS35338-134
12	76-3500-10	CARD CAGE FRONT PLATE NAV 2000R	EA	1.00	JCAIR	76-3500-10
13	76-3500-11	CARD CAGE REAR PLT NAV2000R CHASSIS ASSY	EA	1.00	JCAIR	76-3500-11
14	89-3102-04	SCREW FHP #2-56 X .250 SS 100 DEG	EA	32.00	NATIONAL AERO	NAS662C2R4
15	89-2104-03	SCREW PHP #4-40 X .188 STAINLESS	EA	9.00	MIL SPEC	MS51957-12
16	89-0904-00	WASHER LOCK #4	EA	8.00	MIL SPEC	MS35338-135
					MIL SPEC	MS35338-78
A1	20-5900-00	MOTHER BOARD NAV 2000R	EA	1.00	JCAIR	20-5900-00
REF1	25-9520-54	ASSY DWG CARD CAGE ASSEMBLY NAV2000R	EA	-		

REVISIONS			
REV.	DESCRIPTION	DATE	APPROVED
1	CHNG QTY OF ITEM 5. CHNG NOTES 3 & 4, 9	01/02/01	L JOY
2	REMOVED .166 DIA HOLES, 4 PLCS	11/01/01	L JOY

FRONT VIEV

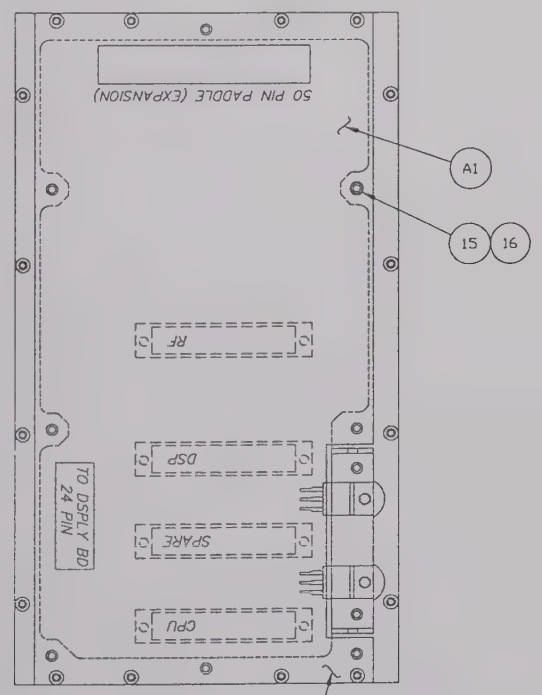

TOP VIEW

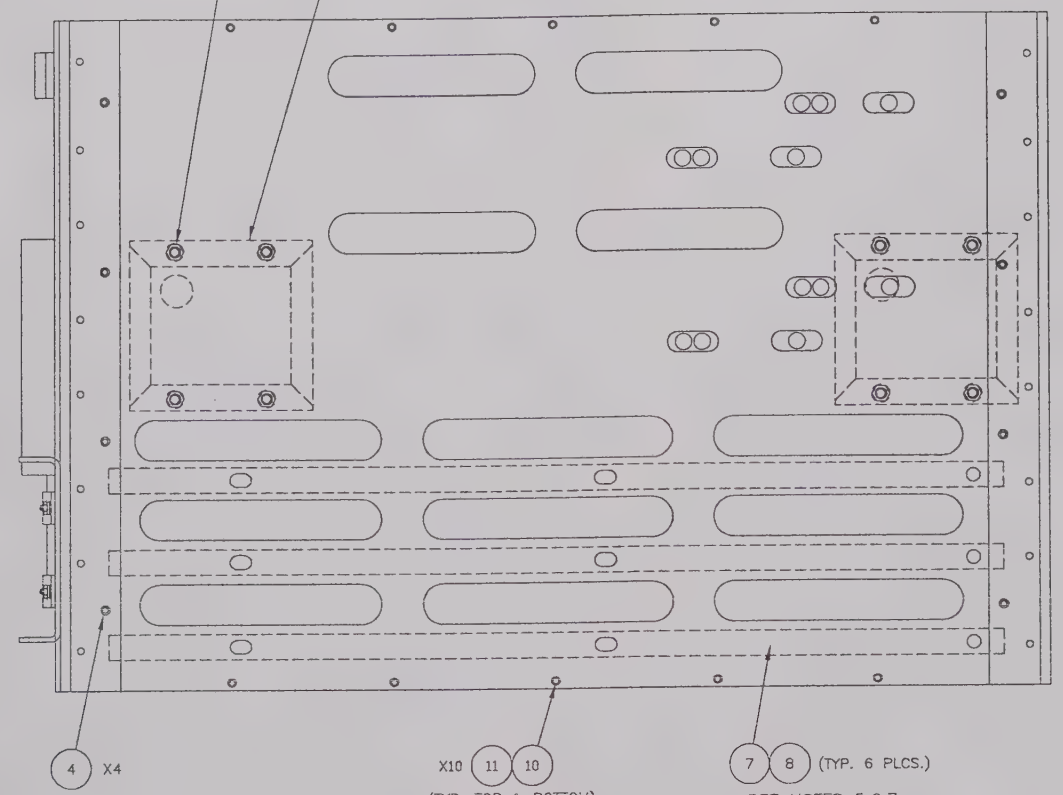

REAR VIEW

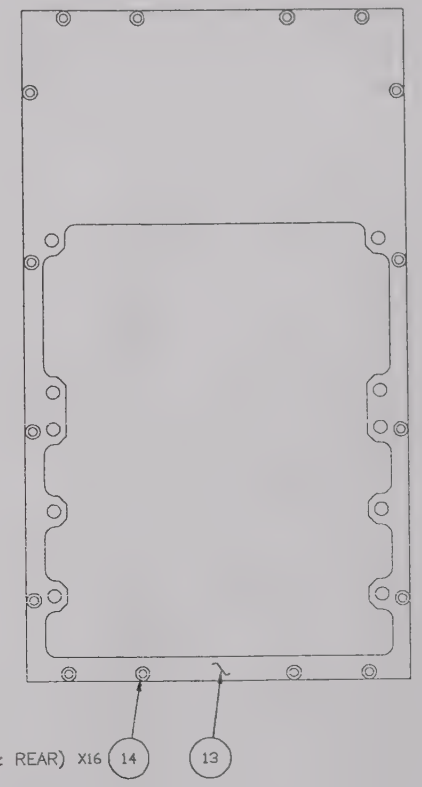

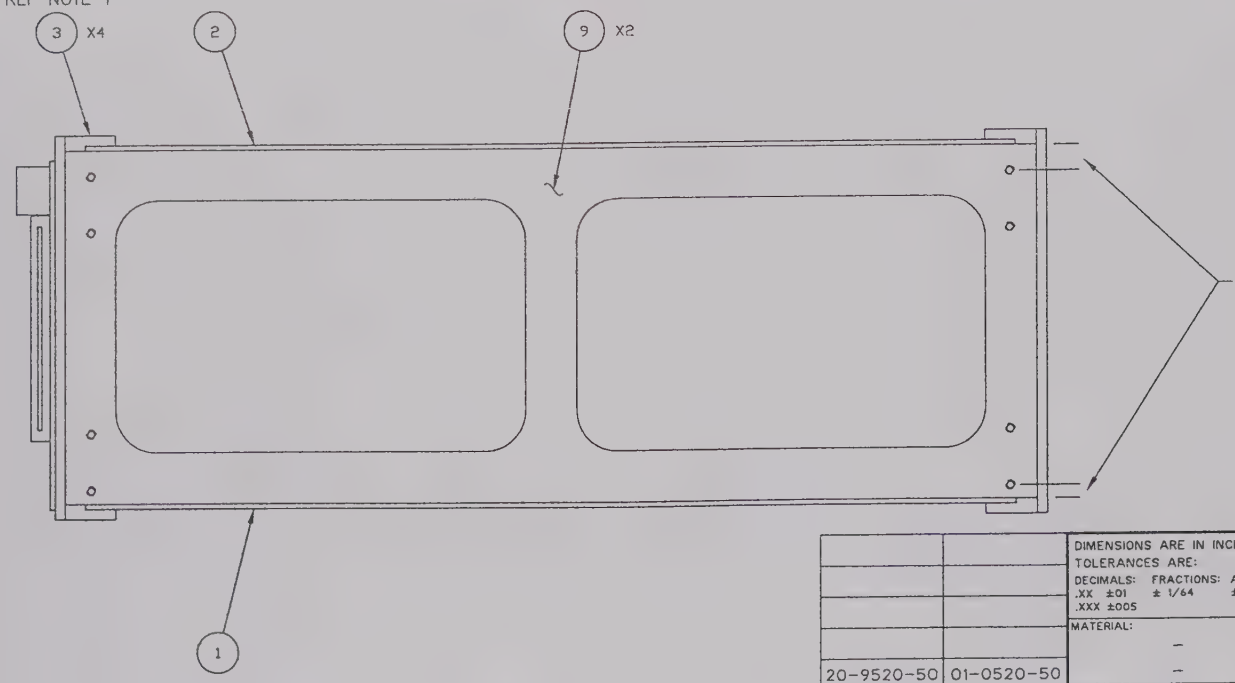

20-9520-50	01-0520-50
NEXT ASS'Y	TOP BILL
UNIT	NAV 2000R

DIMENSIONS ARE IN INCHES
TOLERANCES ARE:
DECIMALS: .XX ±01 .XXX ±005
FRACTIONS: ± 1/64
ANGLES: ± 1/2°

MATERIAL: –
–

FINISH: –
–

GOODRICH CORPORATION
PROPRIETARY INFORMATION

APPROVALS	DATE
DRAWN D BAHM	10/14/92
ENG. L JOY	01/18/01
ISSUED KSM	01/24/01
FILE NAME 25952054.DWG	

GOODRICH
JeAIR TEST SYSTEMS
GOODRICH CORPORATION
400 NEW CENTURY PKWY
NEW CENTURY, KS 66031-0009 USA
PHONE: (913) 764-2452
FAX: (913) 782-5104

ASSEMLY DWG CARD CAGE

SIZE	CAGE NO.	DWG. NO.	REV.
B	41364	25-9520-54	02
			SHEET 1 of 2

ASSEMBLY NOTES:

1. ATTACH ONE CARD CAGE SUPPORT BAR (76-3500-03) TO EACH END OF THE CARD CAGE TOP (47-2089-10) WHICH IS EASILY IDENTIFIED BY THE EXTRA SET OF SMALL SLOTS THAT ARE PRESENT. USE FOUR, FHP #2-56 X 3/16" (89-3102-03) TO FORM THE CARD CAGE TOP ASSEMBLY.

2. ATTACH ONE CARD CAGE SUPPORT BAR (76-3500-03) TO EACH END OF THE CARD CAGE BOTTOM (47-2089-11) USING FOUR, FHP #2-56 X 3/16" (89-3102-03) TO FORM THE CARD CAGE BOTTOM ASSEMBLY.

3. ATTACH TWO CARD CAGE MODULE GUIDES (76-3500-02) TO THE SMOOTH SURFACE OF THE CARD CAGE TOP ASSEMBLY USING FOUR, FHP #4-40 X 3/8" (89-3104-06) PER MODULE GUIDE.

4. ATTACH TWO CARD CAGE MODULE GUIDES (76-3500-02) TO THE SMOOTH SURFACE OF THE CARD CAGE BOTTOM ASSEMBLY USING FOUR, FHP #4-40 X 3/8" (89-3104-06) PER MODULE GUIDE.

5. "RTV" SIX CARD GUIDES (90-1010-17) ONTO SIX CARD GUIDE SPACERS (47-1852-17).

6. "RTV" THREE "CARD GUIDE WITH SPACER" ASSEMBLIES ONTO THE SMOOTH SIDE OF THE CARD CAGE TOP ASSEMBLY.

7. REPEAT STEP 6 FOR THE CARD CAGE BOTTOM ASSEMBLY. BE SURE THE CARD GUIDES STAY IN PLACE UNTIL THE "RTV" DRYS.

8. ATTACH THE CARD CAGE TOP ASSEMBLY, BOTTOM ASSEMBLY, AND THE TWO SIDES (76-3500-05) TOGETHER, USING TWENTY, PHP #2-56 X 1/4" (89-2102-04) AND TWENTY, #2 LOCK WASHERS (89-0902-00) TO FORM THE CARD CAGE ASSEMBLY. BE SURE THE SHORT DISTANCE FROM THE THREADED HOLE TO THE EDGE ON THE MILLED SIDE PART, IS CLOSEST TO THE BOTTOM OF THE CARD CAGE ASSEMBLY. (REF: SHEET 1)

9. ATTACH THE CARD CAGE FRONT PLATE (76-3500-10) AND THE CARD CAGE REAR PLATE (76-3500-11) TO THE CARD CAGE ASSEMBLY CREATED IN STEP 8, USING THIRTY TWO, FHP #2-56 X 1/4" (89-3102-04).

10. ATTACH THE MOTHER BOARD ASSEMBLY (20-5900-00) TO THE CARD CAGE FRONT PLATE USING NINE, PHP #4-40 X 3/16" (89-2104-03) AND NINE, #4 LOCK WASHERS (89-0904-00).

SIZE	CAGE NO.	DWG. NO.	REV.
B	41364	25-9520-54	02
			SHEET 2 of 2

JcAIR INC.

NAME: AM MODULATOR ASSY NAV 2000R -80 ASSY NO: 20-9520-57

REVISION: 02 DATE: 05/18/2000

ITEM/ SYMBOL	JcAIR PART NO.	DESCRIPTION	U/M	QTY	MANUFACTURER	MANF'S P/N
1	76-3501-00	MODULATOR MODULE	EA	1.00	JCAIR	76-3501-00
2	76-3401-01	BOTTOM PANEL MODULE NAV 2000	EA	1.00	TECHNICS	76-3401-01
3	47-2089-13	COVER NAV 2000R	EA	1.00	JCAIR	47-2089-13
4	47-2089-14	COVER NAV 2000R	EA	1.00	JCAIR	47-2089-14
5	47-2089-15	COVER NAV 2000R	EA	1.00	JCAIR	47-2089-15
6	47-2089-24	PLATE MOUNTING END NAV 2000R	EA	1.00	JCAIR	47-2089-24
7	30-0042-03	CONN BNC JAMNUT	EA	1.00	AMP	1-329631-2
8	89-3102-03	SCREW FHP #2-56 X .188 SS 100 DEG	EA	70.00	NATIONAL AERO	NAS662C2R3
9	89-3104-03	SCREW FHP #4-40 X .188 SS 100 DEG	EA	10.00	MIL SPEC	MS24693C-1
10	89-2104-04	SCREW PHP #4-40 X .250 STAINLESS	EA	8.00	MIL SPEC	MS51957-13
11	89-2104-06	SCREW PHP #4-40 X .375	EA	7.00	MIL SPEC	MS51957-15
12	89-0904-00	WASHER LOCK #4	EA	15.00	MIL SPEC	MS35338-135
					MIL SPEC	MS35338-78
13	89-3102-04	SCREW FHP #2-56 X .250 SS 100 DEG	EA	6.00	NATIONAL AERO	NAS662C2R4
14	30-0017-00	CONN SMA ADAPTER JACK TO JACK BULKHEAD	EA	1.00	OMNI SPECTRA	2084-0000-00
15	47-2089-27	COVER AM MODULATOR FENCE NAV 2000R	EA	1.00	JCAIR	47-2089-27
18	57-0520-53	DECAL MODULATOR ADJUSTMENT IDENTIFICATN	EA	1.00	JCAIR	57-0520-53
19	24-4015-00	COAX RG-405	FT	1.00	MIL SPEC	M17/133-RG405
					UNIFORM TUBES	UT-85-M17
20	17-0028-00	FILTER EMI FEEDTHRU LOW PASS 100PF 10A	EA	8.00	MURATA	9900-381-6020
					SCI TECHNOLOGY	9110-101
A1	20-5761-30	AUDIO BD NAV 2000R -80	EA	1.00	JCAIR	20-5761-30
A2	20-5951-00	MODULATOR BOARD NAV-2000R	EA	1.00	JCAIR	20-5951-00
J1	30-0213-00	CONN PLUG BULKHEAD FEMALE STRT	EA	1.00	APPLIED ENG PRO	3028-1541-010
P1	30-0243-01	CONN SMA PLUG STRT 50 OHM DC-18GHZ .086	EA	1.00	AMPHENOL	901-9723
REF1	25-9520-57	ASSY DWG AM MODULATOR ASSY -80	EA	-		
REF2	02-9520-57	SCHEMATIC AM MODULATOR ASSY -80	EA	-		
REF3	04-9520-57	TEST PROC NAV 2000R (-80) AM MODULATOR	EA	-		

REVISIONS				
ZONE	REV.	DESCRIPTION	DATE	APPROVED

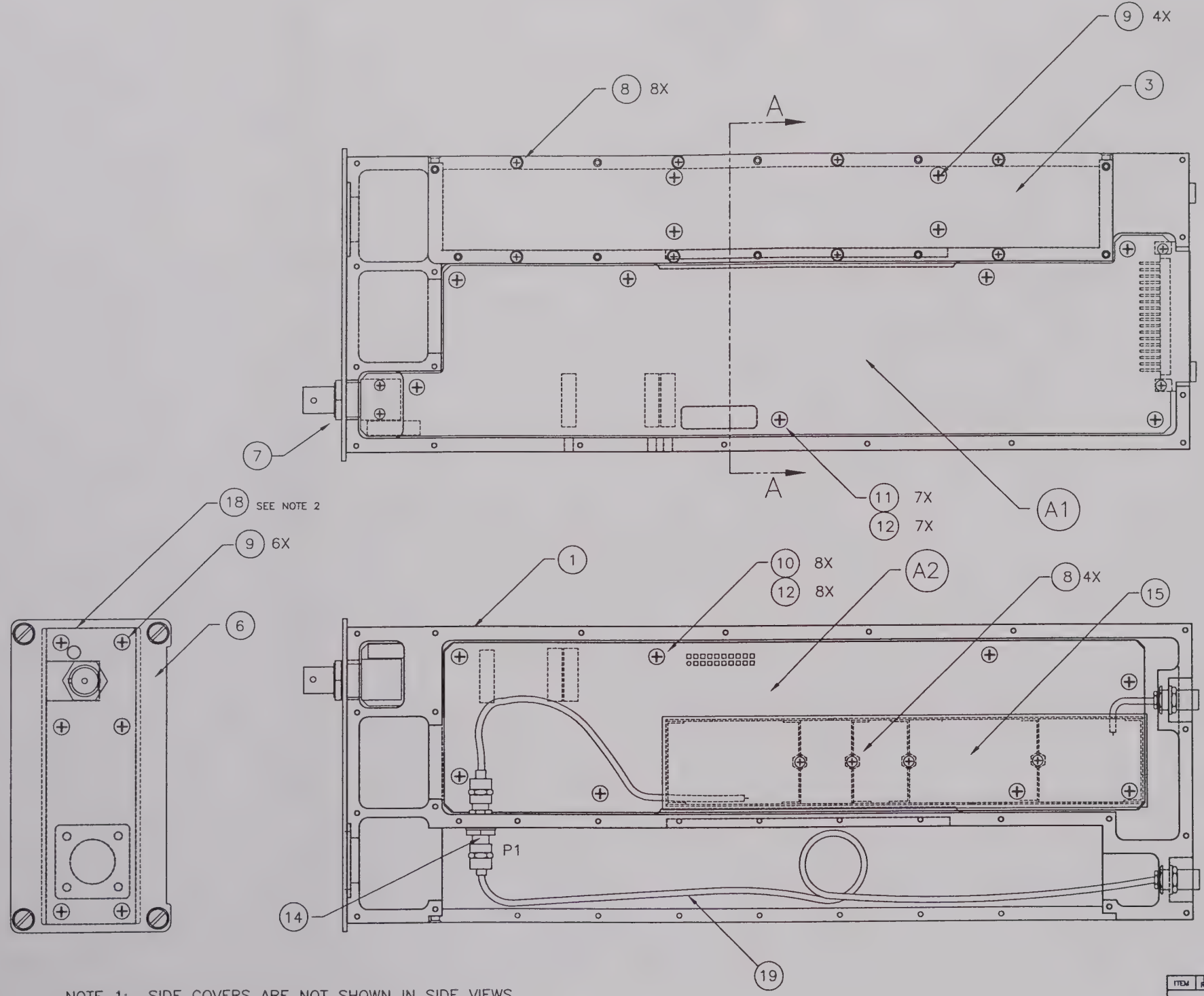

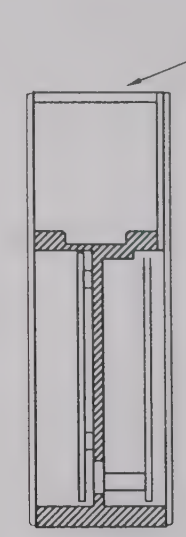

VIEW A

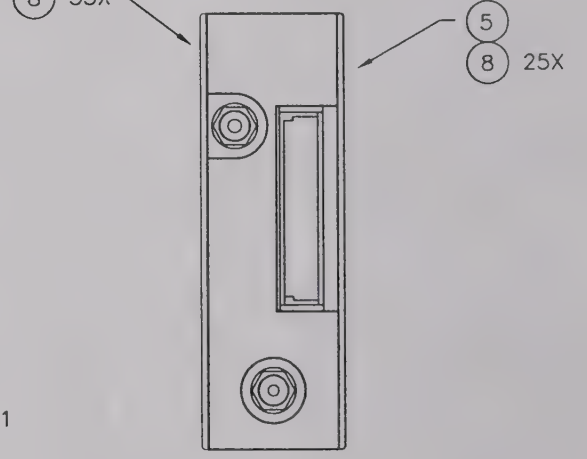

NOTE 1: SIDE COVERS ARE NOT SHOWN IN SIDE VIEWS

NOTE 2: APPLY DECAL (ITEM 18) TO TOP OF HOUSING TO IDENTIFY ADJUSTMENTS

ITEM	QTY REQD	FSCM NO.	PART OR IDENTIFYING NO.	NOMENCLATURE OR DESCRIPTION	MATERIAL SPECIFICATION
				PARTS LIST	

01-9520-80	NAV 2000R
NEXT ASSY	USED ON
APPLICATION	

UNLESS OTHERWISE SPECIFIED DIMENSIONS ARE IN INCHES
TOLERANCES ARE:
FRACTIONS ± DECIMALS .XX± N/A ANGLES ± N/A
.XXX± N/A

CONTRACT NO.

APPROVALS	DATE
DRAWN RRN	12/10/92
CHECKED	7/18
ISSUED	

MATERIAL N/A

FINISH N/A

DO NOT SCALE DRAWING

JcAIR INC
400 INDUSTRIAL PKWY, INDUSTRIAL AIRPORT, KS 66031

AM MODULATOR ASSY

SIZE	FSCM NO.	DWG. NO.	REV.
B		25-9520-57	0

SCALE N/A | UNIT NAV 2000R | SHEET 1 OF 1

REVISIONS				
ZONE	REV.	DESCRIPTION	DATE	APPROVED

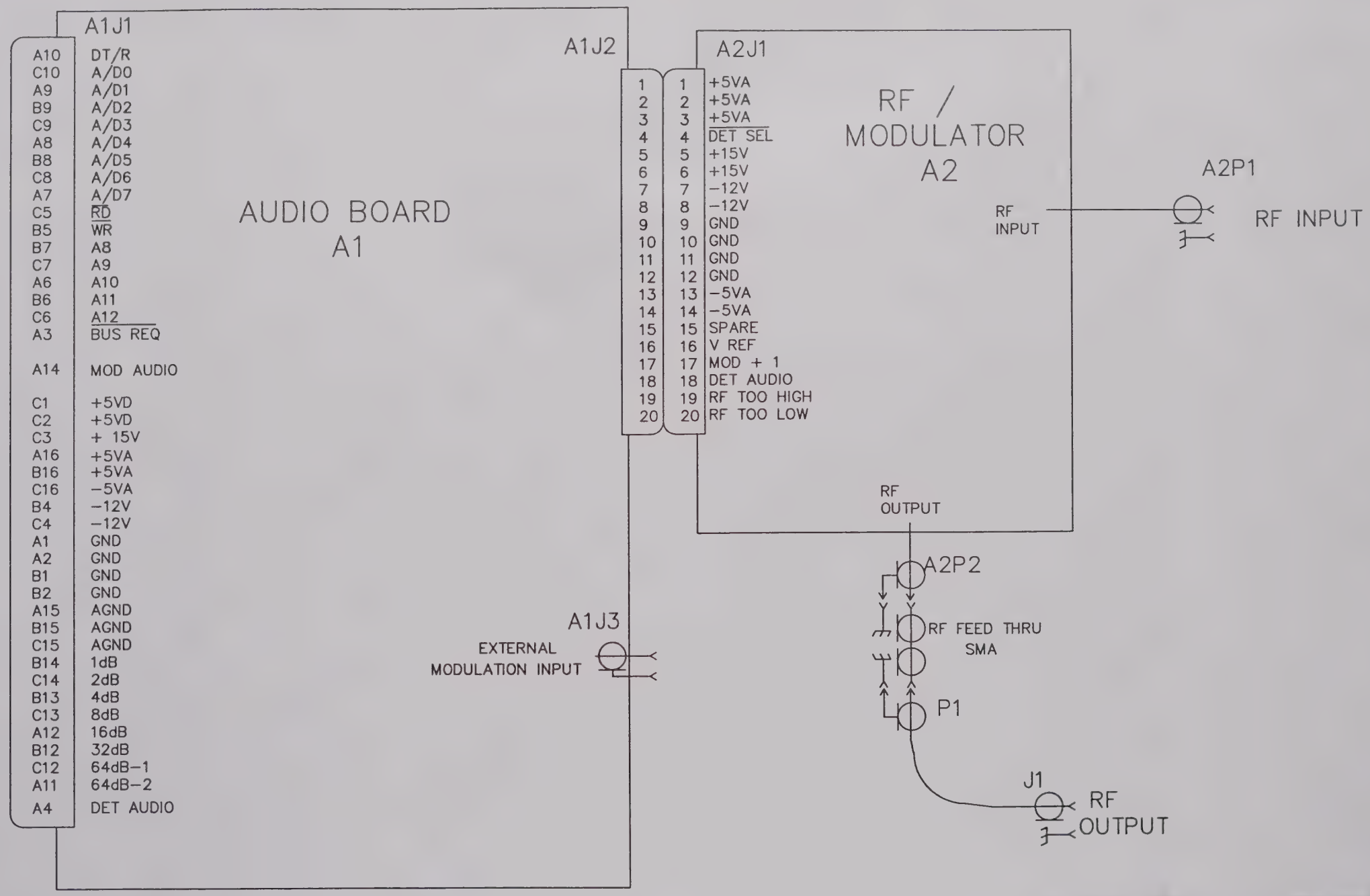

ITEM	QTY REQD	FSCM NO.	PART OR IDENTIFYING NO.	NOMENCLATURE OR DESCRIPTION	MATERIAL SPECIFICATION
				PARTS LIST	

UNLESS OTHERWISE SPECIFIED DIMENSIONS ARE IN INCHES
TOLERANCES ARE:
FRACTIONS ± DECIMALS .XX± N/A .XXX± N/A ANGLES ± N/A

CONTRACT NO.

APPROVALS	DATE
DRAWN RRN	01/14/93
CHECKED	
ISSUED	

JcAIR INC
400 INDUSTRIAL PKWY, INDUSTRIAL AIRPORT, KS 66031

MODULATOR SCHEMATIC

MATERIAL N/A
FINISH N/A
DO NOT SCALE DRAWING

NEXT ASSY	USED ON
20-9520-80	NAV 2000R
APPLICATION	

SIZE	FSCM NO.	DWG NO.	REV.
B		02-9520-57	0
SCALE N/A	UNIT NAV 2000R	SHEET 1 OF 1	

JcAIR INC.

NAME: RPP MODULE ASSY NAV 2000R ASSY NO: 20-9520-62

REVISION: 00 DATE: 05/02/95

ITEM/ SYMBOL	JcAIR PART NO.	DESCRIPTION	U/M	QTY	MANUFACTURER	MANF'S P/N
1	76-3401-05	HOUSING RPP NAV 2000	EA	1.00	JCAIR	76-3401-05
2	17-0025-01	FILTER EMI SUPPRESSION 1200 PF	EA	2.00	MURATA ERIE	9900-381-6022
3	87-0022-00	GASKET WAVED METAL 9 PIN D CONN	EA	1.00	SPECTRUM	57-2019-00100-70
4	30-9102-02	FEMALE SCREW LOCK .560	PR	1.00	AMP	207719-1
5	87-9010-01	GASKET SPIRAL SHIELD .07 DIA CPR/TIN PLT	FT	1.00	SPIRA MANF CORP	MS-.070-1000 FT
6	47-1852-28	COVER RPP HOUSING NAV 2000	EA	1.00	JCAIR	47-1852-28
A1	20-6156-00	RPP RF BOARD NAV 2000R	EA	1.00	JCAIR	20-6156-00
A2	20-6157-00	RPP CONTROL BOARD NAV 2000R	EA	1.00	JCAIR	20-6157-00
J1	30-0100-02	CONN SMA RCPT JACK FLANGE MNT .500 SQ	EA	2.00	OMNI SPECTRA	2052-1133-00
J2	30-0100-02	CONN SMA RCPT JACK FLANGE MNT .500 SQ	EA	-		
REF1	25-9520-62	ASSY DWG RPP MODULE NAV 2000R	EA	-		
REF2	04-9520-62	TEST PROC REVERSE PWR PROTECT NAV 2000R	EA	-		

PROPRIETARY NOTICE
This document is proprietary to JCAIR INC.
and is not to be reproduced or otherwise
disseminated without the written permission
of JCAIR INC.

APPLICATION	
NEXT ASSY	USED ON
–	–
–	–
–	–
–	–
–	–
–	–

DO NOT SCALE DRAWING

UNLESS OTHERWISE SPECIFIED
DIMENSIONS ARE IN INCHES
TOLERANCES ARE:
FRACTIONS DECIMALS ANGLES
± .XXX ± .01 ± 1/2°
.XXX ± .005

MATERIAL
–
–

FINISH
–
–

ISSUED	–
CHECKED	
DRAWN RRN	9 / 94
APPROVALS	DATE

COMPANY NAME
400 INDUSTRIAL PKWY, INDUSTRIAL AIRPORT, KS 66031, USA

RPP MODULE ASS'Y

SIZE	FSCM NO.	DWG. NO.	REV.
B	41364	25-9520-62	0

SCALE N/A | UNIT NAV 200OR | SHEET 1 OF 1

PARTS LIST

ITEM NO.	PART OR IDENTIFYING NO.	NOMENCLATURE OR DESCRIPTION	MATERIAL SPECIFICATION	ITEM

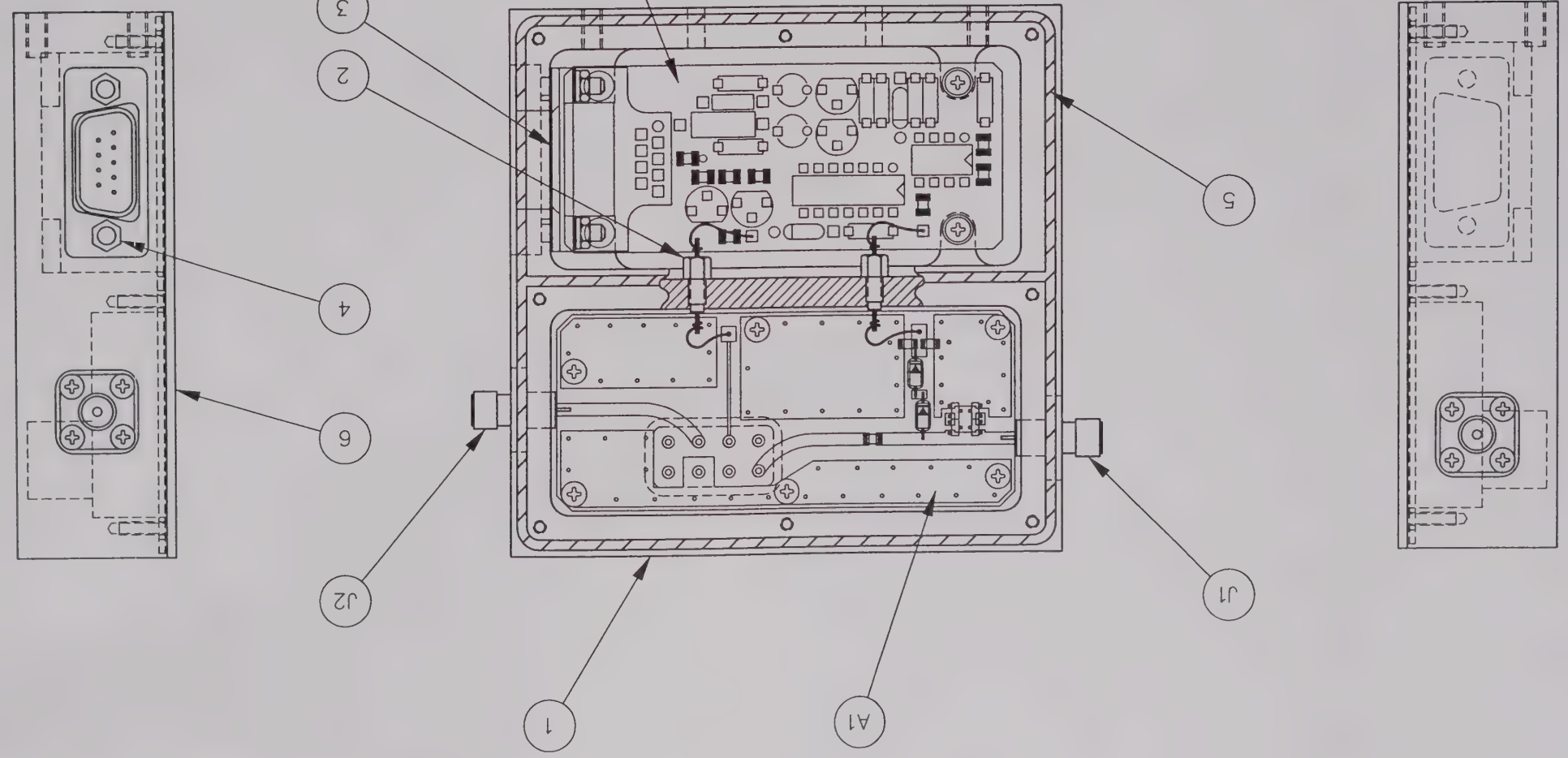

REVISIONS			
REV	DESCRIPTION	DATE	APPROVED

JcAIR INC.

NAME: NAV 2000R -80 CHASSIS ASSY ASSY NO: 20-9520-80

REVISION: 11 DATE: 10/30/2001

ITEM/ SYMBOL	JcAIR PART NO.	DESCRIPTION	U/M	QTY	MANUFACTURER	MANF'S P/N
2	47-2081-50	FRONT PANEL NAV 2000R	EA	1.00	JCAIR	47-2081-50
3	89-2104-04	SCREW PHP #4-40 X .250 STAINLESS	EA	12.00	MIL SPEC	MS51957-13
4	89-0904-00	WASHER LOCK #4	EA	42.00	MIL SPEC	MS35338-135
					MIL SPEC	MS35338-78
5	89-0004-00	WASHER FLAT #4	EA	12.00	MIL SPEC	MS15795-803
6	76-3494-50	DISPLAY BEZEL NAV 2000R	EA	1.00	JCAIR	76-3494-50
7	89-1104-00	NUT HEX #4 SM PAT SS	EA	10.00	NATIONAL AERO	NAS671C4
8	89-0904-00	WASHER LOCK #4	EA	-		
9	90-0189-00	DISPLAY LENS NAV 2000	EA	1.00	LAMINATION TECH	90-0189-00 (4.27 X 3.52 36%)
					OCLI	90-0189-00 (4.27 X 3.52 36%)
10	87-0112-00	GASKET DISPLAY NAV 2000	EA	2.00	JCAIR	87-0112-00
11	76-3401-02	SPACER DISPLAY NAV 2000	EA	2.00	TECHNICS	76-3401-02
12	87-0112-01	GUARD SHOCK NAV 2000	EA	1.00	JCAIR	87-0112-01
13	89-9001-05	SCREW PHP M3 X 10MM	EA	4.00	RELIABLE INDUST	M3 X 10MM PHP
14	89-0004-00	WASHER FLAT #4	EA	-		
15	47-2081-54	SIDE PANEL NAV 2000R	EA	1.00	JCAIR	47-2081-54
16	47-2081-55	SIDE PANEL	EA	1.00	JCAIR	47-2081-55
17	76-3494-53	BLOCK SUPPORT NAV 2000R	EA	2.00	TECHNICS	76-3494-53
18	76-3494-55	SPACER REAR PANEL NAV 2000R	EA	1.00	TECHNICS	76-3494-55
19	90-1031-03	HANDLE STRAP 14.500 LONG	EA	2.00	AMERICAN HANDLE	198-5054 (14.500 LONG)
20	89-2104-05	SCREW PHP #4-40 X .312	EA	16.00	MIL SPEC	MS51957-14
21	89-2104-12	SCREW PHP #4-40 X .750	EA	4.00	MIL SPEC	MS51957-19
22	89-0904-00	WASHER LOCK #4	EA	-		
23	89-2101-12	SCREW PHP #10-32 X .750 SS	EA	4.00	MIL SPEC	MS51958-65
24	76-3500-00	RAIL BRACKET RF MODULE NAV 2000R	EA	2.00	JCAIR	76-3500-00
25	76-3500-01	RAIL RF MODULE NAV 2000R	EA	4.00	JCAIR	76-3500-01
26	89-3104-03	SCREW FHP #4-40 X .188 SS 100 DEG	EA	28.00	MIL SPEC	MS24693C-1
27	47-2089-09	BASE PLATE RF MODULE NAV 2000R	EA	1.00	JCAIR	47-2089-09
28	89-3104-04	SCREW FHP #4-40 X .250 SS 100 DEG	EA	14.00	MIL SPEC	MS24693C-2
29	47-2081-58	MOUNTING BASE NAV 2000R	EA	1.00	JCAIR	47-2081-58
30	76-3500-06	POWER SUPPLY SPACER NAV 2000R	EA	2.00	JCAIR	76-3500-06
31	89-3101-06	SCREW FHP #10-32 X .375 SS 100 DEG	EA	4.00	MIL SPEC	MS24693C-270
32	89-2104-05	SCREW PHP #4-40 X .312	EA	-		
33	89-0904-00	WASHER LOCK #4	EA	-		
34	89-3104-04	SCREW FHP #4-40 X .250 SS 100 DEG	EA	-		
35	89-2106-05	SCREW PHP #6-32 X .312	EA	8.00	MIL SPEC	MS51957-27
36	89-0906-00	WASHER LOCK #6	EA	16.00	MIL SPEC	MS35338-136
					MIL SPEC	MS35338-79
37	89-0006-00	WASHER FLAT #6	EA	16.00	MIL SPEC	MS15795-805
38	47-2089-57	POWER JACK PANEL NAV 2000R	EA	1.00	JCAIR	47-2089-57
39	89-2104-04	SCREW PHP #4-40 X .250 STAINLESS	EA	-		
40	89-0904-00	WASHER LOCK #4	EA	-		
41	89-2106-06	SCREW PHP #6-32 X .375	EA	14.00	MIL SPEC	MS51957-28
42	89-0904-00	WASHER LOCK #4	EA	-		
43	89-1104-00	NUT HEX #4 SM PAT SS	EA	-		
44	89-2106-05	SCREW PHP #6-32 X .312	EA	-		

NAME: NAV 2000R -80 CHASSIS ASSY ASSY NO: 20-9520-80

REVISION: 11 DATE: 10/30/2001

ITEM/ SYMBOL	JcAIR PART NO.	DESCRIPTION	U/M	QTY	MANUFACTURER	MANF'S P/N
45	89-0906-00	WASHER LOCK #6	EA	-		
46	89-0006-00	WASHER FLAT #6	EA	-		
47	76-3494-56	HANDLE SIDE NAV 2000R	EA	2.00	JCAIR	76-3494-56
48	89-9078-10	SCREW FH-SHC #6-32 X .625 82 DEG BLACK	EA	4.00	HOLO-KROME	60028
49	89-2101-06	SCREW PHP #10-32 X .375 SS	EA	1.00	MIL SPEC	MS51958-61
50	89-0901-00	WASHER LOCK #10	EA	1.00	MIL SPEC	MS35338-138
51	76-3494-51	BEZEL TOP/BOTTOM NAV 2000R	EA	2.00	TECHNICS	76-3494-51
52	89-31A4-04	SCREW FHP #4-40 X .250 BHTS 100 DEG	EA	6.00	MIL SPEC	MS24693-2B
54	89-3104-03	SCREW FHP #4-40 X .188 SS 100 DEG	EA	-		
55	90-0432-00	CABLE MOUNT 1.13 X 1.13 ADHESIVE BACKED	EA	2.00	PANDUIT	ABMS-A
56	90-0018-01	CABLE TIE NYLON .87 BUNDLE MAX 100 PC	EA	2.00	PANDUIT	PLT1M-C
58	57-0520-53	DECAL MODULATOR ADJUSTMENT IDENTIFICATN	EA	1.00	JCAIR	57-0520-53
61	30-9012-01	CONTACT SOCKET CRIMP 18-24 AWG	EA	17.00	MOLEX	39-00-0164
62	30-9011-01	CONTACT PIN CRIMP 18-24 AWG	EA	10.00	MOLEX	39-00-0054
65	08-0014-04	TERMINAL RING #4 22-16 AWG NYLON	EA	1.00	AMP	31880
68	08-0014-10	TERMINAL RING #10 22-16 AWG NYLON	EA	19.00	AMP	36154
69	24-4015-00	COAX RG-405	FT	3.00	MIL SPEC	M17/133-RG405
					UNIFORM TUBES	UT-85-M17
70	51-0002-04	TUBING SHRINK CLEAR .187 OD	FT	3.00	ALPHA	FIT-221-3/16
71	92-6770-04	SPACER F/F #6-32 X .250 SS .250 RND	EA	4.00	RAF	1680-632-SS-0
72	47-1852-29	MTG BKT FAN NAV 2000R	EA	1.00	JCAIR	47-1852-29
73	89-1006-00	NUT HEX #6	EA	4.00	MIL SPEC	MS35649-264
74	30-9034-00	TERMINAL CRIMP 18-24 AWG	EA	6.00	MOLEX	08-50-0106
75	47-2089-31	SHIELD POWER SUPPLY NAV 2000R	EA	1.00	JCAIR	47-2089-31
76	57-9061-00	LABEL EARTH GROUND ALUM .60 OD	EA	1.00	GM NAMEPLATE	95010-00107
77	90-0397-40	CONTACT STRIP SPRING-LINE 16" BRT COPPER	EA	1.00	CHOMERICS	81-02-11822-2000
78	76-3494-58	BAR SPACER SIDE PANEL NAV2000R	EA	4.00	JCAIR	76-3494-58
A3	20-9520-54	CARD CAGE ASSY NAV2000R	EA	1.00	JCAIR	20-9520-54
A4	20-5745-20	KEYBOARD NAV 2000 W/RF ON/OFF "HOT" KEY	EA	1.00	JCAIR	20-5745-20
A5	15-0094-00	DISPLAY ELECTROLUMINESCENT 5/15V PWR UNT	EA	1.00	PLANAR	EL320.256-F6
A6	20-9520-62	RPP MODULE ASSY NAV2000R	EA	1.00	JCAIR	20-9520-62
A7	15-0141-01	AMP RF .00025-500 MHZ +23 DBM 21 DB GAIN	EA	1.00	MINI-CIRCUITS	ZHL-6A
A8	18-0055-00	ATTENUATOR PROG 0-127DB PAD 100KHZ-450MZ	EA	1.00	WEINSCHEL	5785
B1	48-4012-01	DC FAN +24V	EA	1.00	PANASONIC	FBK-04F24H
C1	CA-0107-15	CAP AL 100UF 50V	EA	2.00	SPRAGUE	TVA1310
C2	CA-0107-15	CAP AL 100UF 50V	EA	-		
E1	08-0002-10	LUG SOLDER #10 INT TOOTH 30 DEG BEND	EA	1.00	HH SMITH	1414-10
F1	36-0033-0H	FUSE 1.6A 250V 5 X 20MM FAST ACTING	EA	2.00	BUSS	GDB-1.6A
					LITTELFUSE	217 01.6
F2	36-0033-0H	FUSE 1.6A 250V 5 X 20MM FAST ACTING	EA	-		
FL1	17-0041-11	PWR ENTRY MDL 2 VOLT SEL/2 FUSE/3A W/SHL	EA	1.00	CORCOM	PS00XDS3B
J1	30-0155-00	CONN N/SMA ADAPTER JACK TO JACK FLNG MNT	EA	1.00	AUTOMATIC CONN	KX-2733
					OMNI SPECTRA	3080-2242-00
J2	30-1984-08	CONN HEADER DBL ROW MINI-FIT 8 POS	EA	1.00	MOLEX	39-01-3089
J4	30-0311-00	CONN BNC PLUG/SMA JACK ADAPTER	EA	1.00	ALLIED ENG PRO	3282-2240-00
L1	19-2172-04	INDUCTOR SNGL HASH 250UH 2.5A .17OHM 20%	EA	1.00	JW MILLER	5254
P1	30-1983-08	CONN HOUSING DBL ROW MINI-FIT 8 POS	EA	1.00	MOLEX	39-01-2085
P3	30-5002-00	CONN D FEMALE 9 PIN CRIMP	EA	1.00	AMP	205203-1

NAME: NAV 2000R -80 CHASSIS ASSY ASSY NO: 20-9520-80

REVISION: 11 DATE: 10/30/2001

ITEM/ SYMBOL	JcAIR PART NO.	DESCRIPTION	U/M	QTY	MANUFACTURER	MANF'S P/N
P4	30-2084-06	CONN HOUS SNGL ROW 18-24AWG .156SP 6 POS	EA	1.00	MOLEX	09-50-3061
P5	30-2084-03	CONN HOUS SNGL ROW 18-24AWG .156SP 3 POS	EA	1.00	MOLEX	09-50-3031
P10	30-0212-02	CONN SLB JACK BULKHD MALE FLOAT MT RTANG	EA	2.00	APPLIED ENG PRO	3006-1541-610
P11	30-0220-00	CONN SMB CBL PLUG RT ANG FEML SLDR RG405	EA	1.00	APPLIED ENG PRO	2005-1541-010
P12	30-0212-02	CONN SLB JACK BULKHD MALE FLOAT MT RTANG	EA	-		
P13	30-0243-01	CONN SMA PLUG STRT 50 OHM DC-18GHZ .086	EA	6.00	AMPHENOL	901-9723
P14	30-0243-01	CONN SMA PLUG STRT 50 OHM DC-18GHZ .086	EA	-		
P15	30-0243-01	CONN SMA PLUG STRT 50 OHM DC-18GHZ .086	EA	-		
P16	30-0243-01	CONN SMA PLUG STRT 50 OHM DC-18GHZ .086	EA	-		
P17	30-0243-01	CONN SMA PLUG STRT 50 OHM DC-18GHZ .086	EA	-		
P18	30-0241-01	CONN BNC SOLDER TYPE RG405	EA	1.00	M/A COM	3201-7985-10
P19	30-0243-01	CONN SMA PLUG STRT 50 OHM DC-18GHZ .086	EA	-		
PAD1	18-0004-02	ATTENUATOR FIXED 20DB PAD M/F SMA DC12.4	EA	1.00	WEINSCHEL	3M-20
PS1	20-9520-53	POWER SUPPLY ASSY NAV2000R	EA	1.00	JCAIR	20-9520-53
PS2	15-0331-00	PWR SUPPLY +24VDC 40W 85-264VAC 47-440HZ	EA	1.00	PICO	91363
S1	31-5109-02	SWITCH PUSHBTN DPST INCAND 6V SQ RED	EA	1.00	E-SWITCH	D16-EE-S1-2-M RED
TB1	08-1026-08	TERMINAL BLOCK DBL ROW .375 SP 8 TERM	EA	1.00	CINCH	8-164
					KULKA	670A GP 08
					MARATHON	108
TB2	08-1022-19	TERMINAL STRIP 5 LUG-1 GND	EA	1.00	HH SMITH	866
					TRW	006-00419-3
					TRW	54C
W6	24-2014-C9	WIRE PVC 14 AWG 600V GRN/YEL	FT	1.00	BELDEN	8916-189
REF1	25-9520-80	ASSY DWG CHASSIS NAV 2000R	EA	-		
REF2	02-9520-80	SCHEMATIC CHASSIS ASSY NAV 2000R	EA	-		
REF3	04-9520-50	TEST PROCEDURE NAV 2000R CHASSIS	EA	-		

REVISIONS			
REV.	DESCRIPTION	DATE	APPROVED
1	MISC CHANGES	07/96	RRN
2	ADD ITEM 71; NEW TITLE BLOCK; ADD BFG LOGO	06/16/98	DG
3	ADD C1 AND NOTE 16.	08MAR99	R DURHAM
4	ADD NOTES 17 THRU 21 & CABLE REFS.	05/18/99	T JARBOE
5	ADD C2, L1 AND TB2	08/31/00	D TRAUL
6	MADE CHANGES FOR CE MARKING ADDED NOTES 24,25	01/15/01	L JOY
7	REMOVED PAD2 CHANGED PAD 1	02/19/01	ROB D
8	REMOVED ITEM 53 AND ADDED 2 TO ITEM 78	10/24/01	K RUSH

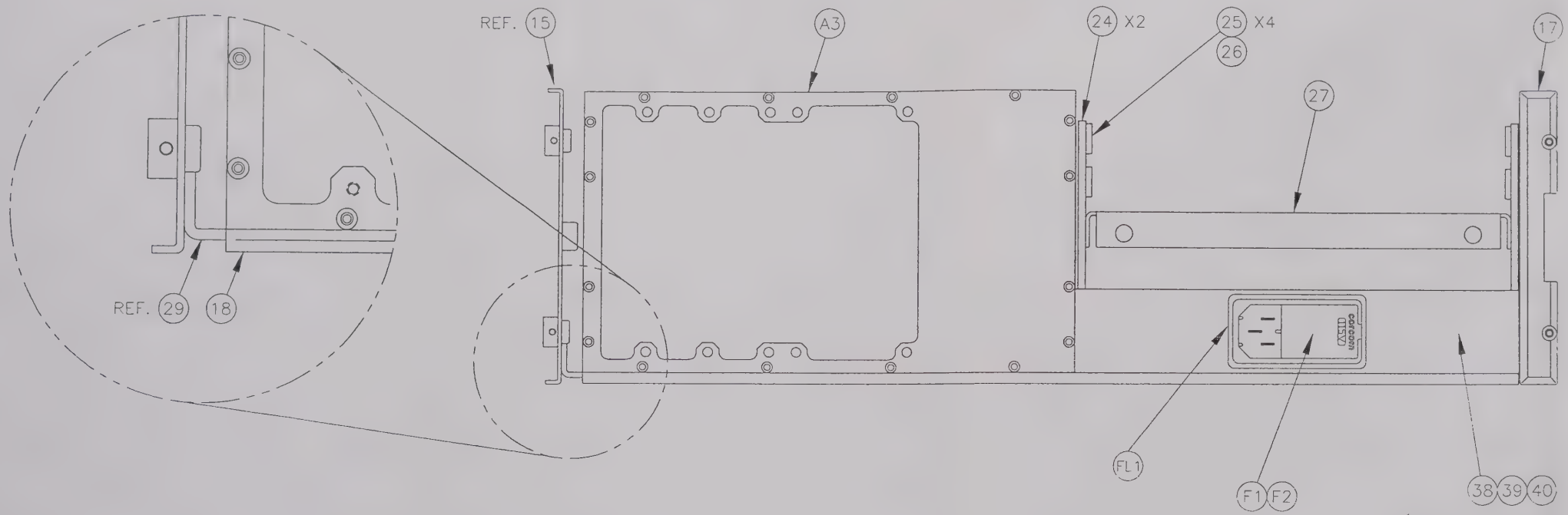

SEE (BASE PLATE ASM.) NOTE (4)

SEE (FRONT PANEL ASM.) NOTES (3-8)

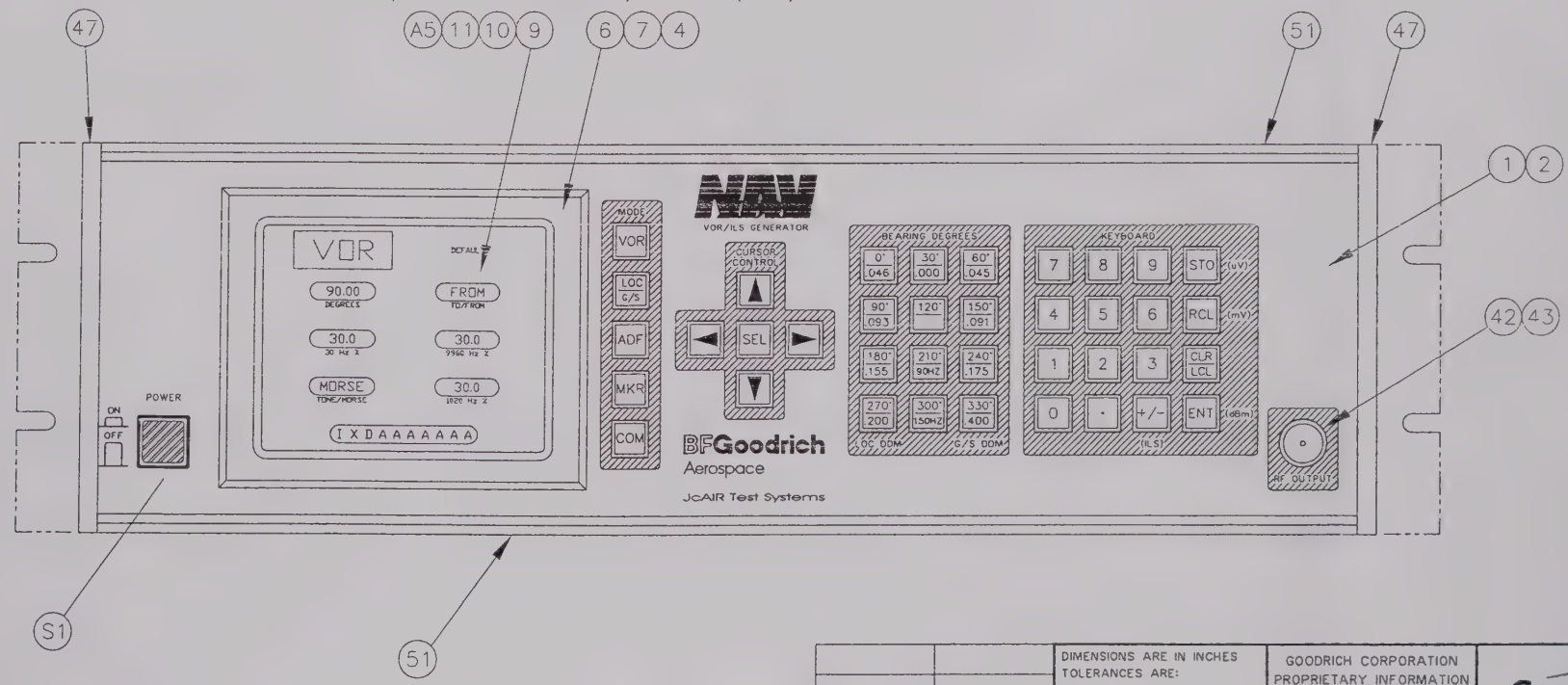

		DIMENSIONS ARE IN INCHES TOLERANCES ARE: DECIMALS: FRACTIONS: ANGLES: .XX ±01 ± 1/64 ± 1/2° .XXX ±005	GOODRICH CORPORATION PROPRIETARY INFORMATION	GOODRICH	JcAIR TEST SYSTEMS GOODRICH CORPORATION 400 NEW CENTURY PKWY NEW CENTURY, KS 66031-0009 USA PHONE: (913) 764-2452 FAX: (913) 782-5104
		MATERIAL: –	APPROVALS / DATE	CHASSIS ASSEMBLY	
			DRAWN RRN 10/94		
20-9520-80	01-0520-80		ENG. S HUFFMAN 7/13/00		
NEXT ASS'Y	TOP BILL	FINISH: –	ISSUED S HUFFMAN 9/13/00	SIZE B	CAGE NO. 41364
UNIT NAV 2000R			FILE NAME 25952080.DWG	DWG. NO 25-9520-80	REV 08
					SHEET 1 of 3

05-0019-02

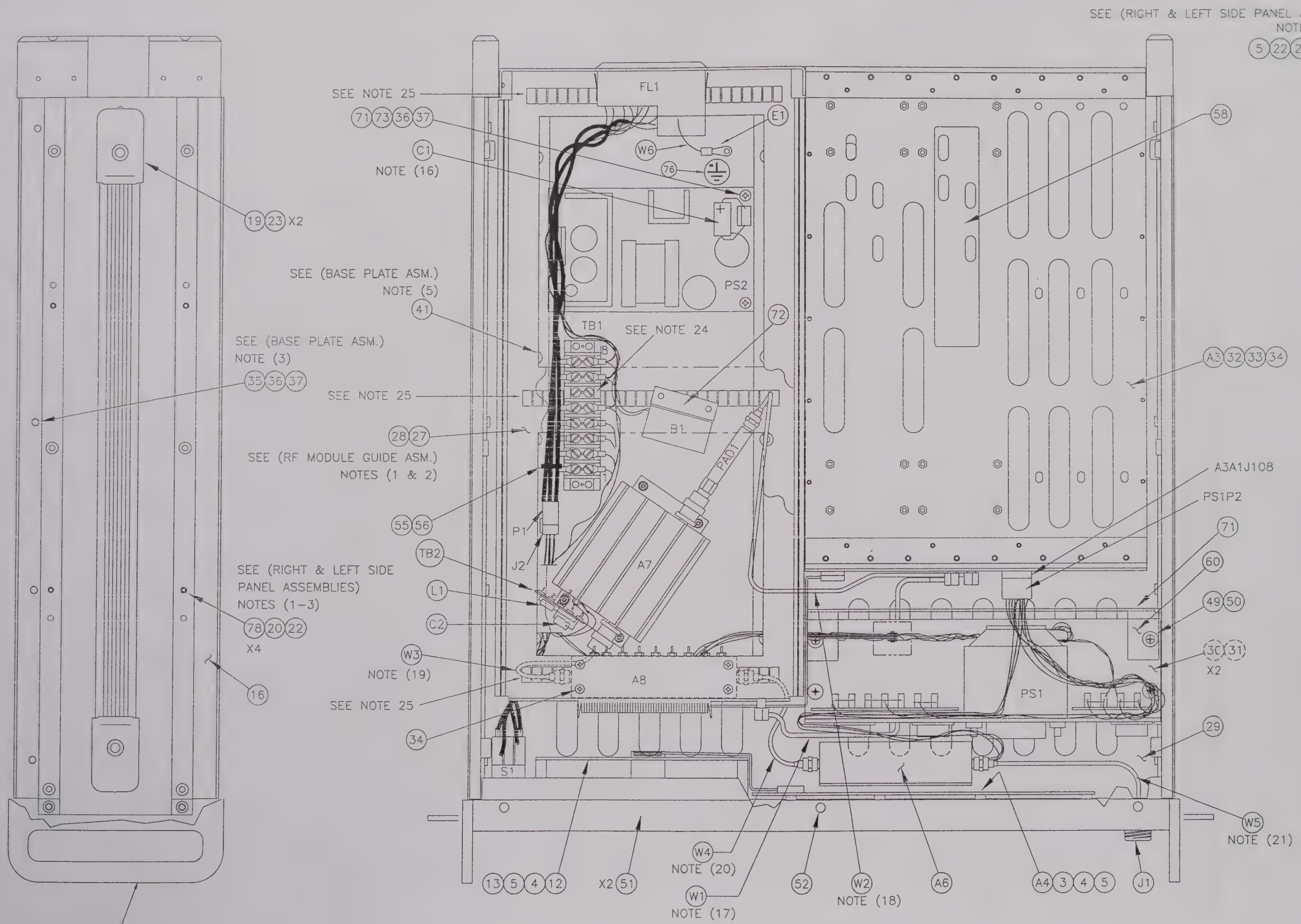

SEE (FRONT PANEL ASM.) NOTES SHEET 3
SEE (RIGHT & LEFT SIDE PANEL ASM.) NOTES SHEET 3
SEE (RF MODULE GUIDE ASM.) NOTES SHEET 3
SEE (BASE PLATE ASM.) NOTES SHEET 3

SIZE	CAGE NO.	DWG NO.	REV
B	41364	25-9520-80	08
			SHEET 2 of 3

05-0019-02

FRONT PANEL ASSEMBLY:

1. IF NECESSARY ATTACH LEXAN NAV 2000R FRONT PANEL OVERLAY TO THE FRONT PANEL (47-2081-50) USING TEMPORARILY FASTENED KEYBOARD ASSEMBLY (20-5745-10) AS GUIDE TO ENSURE PROPER PLACEMENT.

2. ATTACH THE KEYBOARD ASSEMBLY (20-5745-10) TO THE FRONT PANEL (47-2081-50) USING EIGHT, #4-40 PHP 0.250" SCREWS (89-2104-04) WITH EIGHT #4 LOCK WASHERS (89-0904-00) AND EIGHT #4 FLAT WASHERS (89-0004-00).

3. ATTACH THE DISPLAY BEZEL (76-3494-50) TO THE FRONT PANEL USING SIX #4 SMALL PATTERN HEX NUTS (89-1104-00) AND SIX #4 LOCK WASHERS (89-0904-00).

4. ATTACH ONE DISPLAY GASKET (87-0112-00) TO EACH SIDE OF THE DISPLAY LENS (90-0189-00).

5. REMOVE THE DISPLAY'S (15-0094-00) OUTER BOARD BY UNSCREWING THE FOUR STANDOFFS AT THE FOUR CORNERS. ATTACH THE FOUR HEX STANDOFFS (THE ONES WITH THE THREADED POST ON ONE END) TO THE FOUR METRIC STUDS PRESSED INTO THE FRONT PANEL (47-2081-50). THE HEX PORTION OF THE PREVIOUSLY MENTIONED STANDOFF SHOULD BE TIGHTENED IN PLACE AS FAR AS IT WILL GO AND LOCKED WITH PERMANENT LOC-TITE.

6. PRESS THE TWO DISPLAY SPACERS (76-3401-02) OVER THE TOP OF THE DISPLAY STUDS YOU ATTACHED IN STEP 5 ABOVE. BE SURE THE DISPLAY SPACERS SMOOTH EDGE IS FULLY IN THE CONTACT WITH THE BACK SURFACE OF THE FRONT PANEL. (NOTE: THE FIT WILL BE SNUG.)

7. PLACE THE DISPLAY LENS WITH GASKETS, AS ASSEMBLED IN STEP 4 INTO THE FRAME CREATED BY THE DISPLAY SPACERS ON THE DISPLAY STUDS AS ASSEMBLED IN STEP 6.

8. PUT THE DISPLAY OVER THE STUDS AND SCREW ON THE (FF) STANDOFFS REMAINING FROM THE DISASSEMBLY PROCESS IN STEP 5.

9. ATTACH THE DISPLAY SHOCK GUARD (87-0112-01) USING FOUR PHP METRIC #9 SCREWS, FOUR #4 LOCK WASHERS (89-0904-00) AND FOUR #4 FLAT WASHERS (89-0004-00).

RIGHT SIDE PANEL AND LEFT SIDE PANEL ASSEMBLIES:

1. ATTACH FOUR SUPPORT BARS LABELED BAR SPACERS (76-3494-53) TO THE RIGHT SIDE PANEL (47-2081-54) AND THE LEFT SIDE PANEL (47-2081-55) USING FOUR #4-40 PHP 0.312" SCREWS (89-2104-05) AND FOUR #4 LOCK WASHERS (89-0904-00) ON EACH SIDE PANEL.

2. ATTACH AT THE BACK EDGE ONE BLOCK SUPPORT (76-3494-53) TO EACH SIDE USING TWO #4-40 PHP 0.750" SCREWS, TWO #4 LOCK WASHERS (89-0904-00) AND TWO #4 FLAT WASHERS (89-0004-00) ON EACH SIDE.

3. FASTEN ONE CARRYING HANDLE (90-1031-03) TO EACH SIDE USING TWO #10 FHP, 0.750" ON EACH SIDE.

RF MODULE GUIDE ASSEMBLY:

1. ATTACH TWO RF MODULE RAILS (76-3500-01) TO EACH RF MODULE BRACKET (76-3500-00) USING SIX #4-40 FHP, 0.188" SCREWS (89-3104-03) FOR EACH RAIL.

2. FASTEN TWO RAIL BRACKETS, WITH ATTACHED RAILS, TO THE RF MODULE BASE PLATE (47-2089-09) USING THREE #4-40 FHP 0.250" SCREWS (89-3104-04) FOR EACH SIDE. THE MOUNTING FLANGES ON THE RF MODULE BASE PLATE SHOULD BE FACING DOWN, TOWARDS THE FLANGES OF THE RAIL BRACKETS WHICH HAVE SEVEN FLOATING PEM NUTS INSTALLED IN EACH.

BASE PLATE ASSEMBLY:

1. ATTACH TWO POWER SUPPLY SPACERS (76-3500-06) TO THE NAV 2000R MOUNTING BASE (47-2081-58) USING TWO #10 FHP 0.312" SCREWS (89-3101-06).

2. ATTACH THE CARD CAGE ASSEMBLY (20-9520-54) TO THE MOUNTING BASE (47-2081-58) USING EIGHT #4-40 PHP 0.312" SCREWS (89-2104-05) WITH EIGHT #4 LOCK WASHERS (89-0904-00) TO FASTED CARD CAGE FRONT END, WHICH IS THE END WITH THE MOTHER BOARD ATTACHED, TOWARD THE UNIT FRONT AND EIGHT #4 FHP 0.250" SCREWS (89-3104-04) TO FASTEN CARD CAGE BACK END TOWARD THE REAR OF THE NAV 2000R.

3. ATTACH THE LEFT SIDE PANEL ASSEMBLY TO THE MOUNTING BASE (47-2081-58) USING FOUR #6-32 PHP SCREWS WITH FOUR #6 LOCK WASHERS (89-0906-00) AND FOUR #6 FLAT WASHERS (89-0006-00).

4. FOR THE POWER ENTRY MODULE INSTALLATION: FIRST INSTALL ITEM 38. ATTACH E1 TO W6 AND SOLDER W6 TO FL1-GND. THEN SNAP INTO PLACE FL1 TO ITEM 38. ATTACH E1 TO GND STUD WITH PROPER HARDWARE.

5. ATTACH RF MODULE GUIDE ASSEMBLY TO THE BASE PLATE WITH THE SMALL LIPPED EDGE TOWARD THE UNIT FRONT USING FOURTEEN #6-32 PHP 0.375"SCREWS (89-2106-06).

6. ATTACH THE " RF SYNTHESIZER TO MOTHER BOARD COAXIAL CABLE ", TO THE MOTHER BOARD ON THE CARD CAGE.

7. CONNECT THE MOTHERBOARD KEYBOARD CABLE TO THE KEYBOARD AND THE KEYBOARD TO DISPLAY CABLE TO THE DISPLAY.

8. ATTACH THE MOTHER BOARD TO RF OUT COAX TO THE FRONT PANEL USING FOUR #4 SMALL PATTERN HEX NUTS (89-1104-00) AND FOUR #4 LOCK WASHERS (89-0904-00).

9. FASTEN THE FRONT PANEL ASSEMBLY USING THE LEFT SIDE BEZEL WITH TWO #6-32 82° FLAT HEAD SOCKET CAP SCREWS (BLACK) 0.625" LONG, HEAT TREATED ALLOY STEEL. (NO EXCEPTIONS)

10. FASTEN THE MOTHERBOARD TO RF OUT COAX (55-0520-52) TO THE MOTHERBOARD LOCATED ON THE CARD CAGE.

11. ATTACH THE RIGHT SIDE PANEL ASSEMBLY TO THE BASE PLATE ASSEMBLY USING FOUR #6-32 PHP 0.312"SCREWS (89-3106-05) WITH FOUR #6 LOCK WASHERS (89-0906-00) AND FOUR #6 FLAT WASHERS (89-0006-00).

12. ATTACH THE RIGHT SIDE PANEL ASSEMBLY TO FRONT PANEL ASSEMBLY USING TWO #6-32 82° FLAT HEAD SOCKET CAP SCREWS (BLACK) 0.625" LONG, HEAT TREATED ALLOY STEEL. (NO EXCEPTIONS)

13. ATTACH THE TOP AND BOTTOM FRONT PANEL BEZELS TO THE FRONT PANLE USING SIX #4-40 FHP 0.375" BLACK ANODIZED SCREWS.

14. ATTACH THE POWER SUPPLY (AND BRACKET) TO MOUNTING BASE ASSEMBLY ON POWER SUPPLY SPACERS USING FOUR #10 PHP 0.375" SCREWS (89-2101-06) WITH FOUR #10 LOCK WASHERS (89-0901-00).

15. INSERT THE POWER SWITCH INTO FRONT PANEL AND CONNECT THE POWER SWITCH ASSEMBLY TO THE POWER SUPPLY ASSEMBLY.

16. INSTALL C1 ACCROSS PS2 CONNECTOR P4, WITH C1(+) CONNECTED TO PIN 1 AND C1(-) CONNECTED TO PIN 6.

17. W1 IS 13.5 INCHES OVERALL LENGTH.
    P10 30-0212-02 CONN JACK BULKHEAD MALE FLOAT MTG RT ANGLE
    P11 30-0220-00 CONN SMB CBL PLUG RT ANGLE FEM SOLDER RG-405
    COAX 24-4015-00 COAX RG-405

18. W2 IS 16 INCHES OVERALL LENGTH.
    P12 30-0212-02 CONN JACK BULKHEAD MALE FLOAT MTG RT ANGLE
    P13 30-0243-01 CONN SMA PLUG STRT 50 OHM DC-18GHz
    COAX 24-4015-00 COAX RG-405

19. W3 IS 5 INCHES OVERALL LENGTH.
    P18 30-0241-01 CONN BNC SOLDER TYPE RG-405
    P19 30-0243-01 CONN SMA PLUG STRT 50 OHM DC-18GHz
    COAX 24-4015-00 COAX RG-405

20. W4 IS 6 INCHES OVERALL LENGTH.
    P16 30-0243-01 CONN SMA PLUG STRT 50 OHM DC-18GHz
    P17 30-0243-01 CONN SMA PLUG STRT 50 OHM DC-18GHz
    COAX 24-4015-00 COAX RG-405

21. W5 IS 8 INCHES OVERALL LENGTH.
    P14 30-0243-01 CONN SMA PLUG STRT 50 OHM DC-18GHz
    P15 30-0243-01 CONN SMA PLUG STRT 50 OHM DC-18GHz
    COAX 24-4015-00 COAX RG-405

22. INSTALL TB2 TO A7 MOUNTING SCREW THAT IS NEAREST TO +24V AND GND TERMINALS.

23. ADD HEAT SHRINK TUBING OVER L1 BEFORE INSTALLING ON TB2.

24. FOR CREEPAGE AND CLEARANCE DISTANCE, FOR SAFETY, REMOVE THE TWO SCREWS AT TB1-6.

25. CUT 24 FINGERS (APPROXIMATELY 6.048") FROM ITEM 77 AND PLACE AS INDICATED WITH ADHESIVE STRIP TO REAR OF UNIT.

SIZE	CAGE NO.	DWG. NO.	REV
B	41364	25-9520-80	08
			SHEET 3 of 3

05-0019-02

REVISIONS			
REV.	DESCRIPTION	DATE	APPROVED
1	DISCONNECTED TB1 FROM PS2	7/96	MOE H
2	ADDED PS1-5 CONNECTION	07/22/97	MP
3	REMOVE PAD2 LABEL ON RPP MODULE INPUT	04/09/98	J KITT
4	ADD WIRE COLORS	06/16/98	DG
5	CHANGE WIRING TO TWISTED PAIR, ADD C1 TO PS2	08MAR99	R DURHAM
6	ADD C2, L1 AND TB2	08/31/00	D TRAUL
7	REDREW WITH NEW SI SWITCH AND POWER MODULE	01/15/01	L JOY
8	REMOVED PAD 2, CHNGD PAD 1 TO 20dB	02/19/01	ROB D
9	CORR. WIRING FROM FL1-C TO PS2P1-N	07/06/01	L. Joy

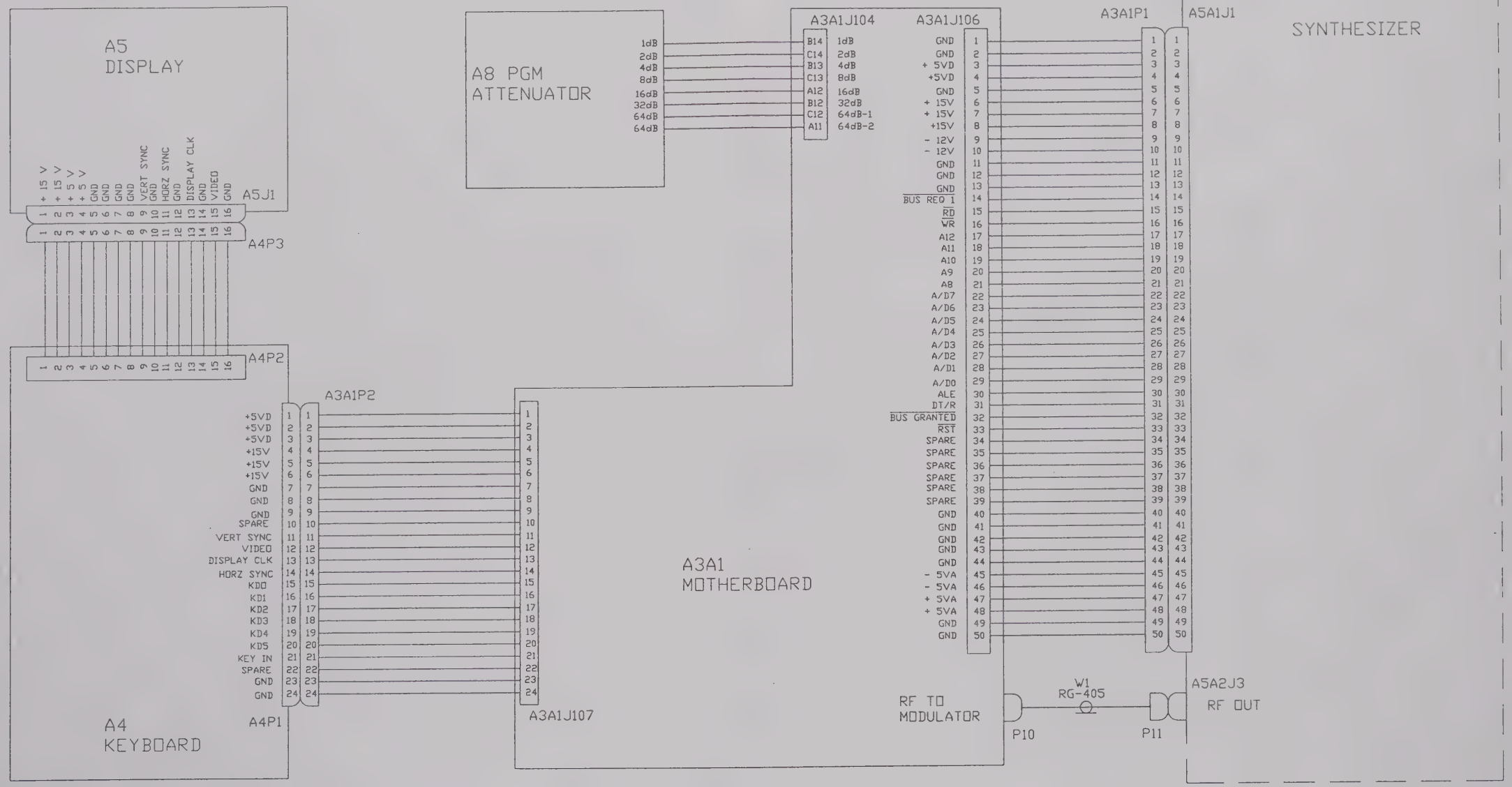

NOTES:
1. JUMP A3A1J104 - B14 TO A8 - 1dB
2. JUMP A3A1J104 - C14 TO A8 - 2dB
3. JUMP A3A1J104 - B13 TO A8 - 4dB
4. JUMP A3A1J104 - C13 TO A8 - 8dB
5. JUMP A3A1J104 - A12 TO A8 - 16dB
6. JUMP A3A1J104 - B12 TO A8 - 32dB
7. JUMP A3A1J104 - C12 TO A8 - 64dB-1
8. JUMP A3A1J104 - A11 TO A8 - 64dB-2

20-9520-80	01-0520-80
NEXT ASS'Y	TOP BILL
UNIT	NAV 2000R

DIMENSIONS ARE IN INCHES
TOLERANCES ARE:
DECIMALS: .XX ±.01 .XXX ±.005
FRACTIONS: ± 1/64
ANGLES: ± 1/2°
MATERIAL: –
FINISH: –

BFGOODRICH AEROSPACE
PROPRIETARY INFORMATION

APPROVALS	DATE
DRAWN RRN	10/94
ENG. D TRAUL	7/13/00
ISSUED S HUFFMAN	9/13/00
FILE NAME 02952080.DWG	

BFGoodrich
Aerospace
JcAIR Test Systems
400 NEW CENTURY PARKWAY
NEW CENTURY, KS 66031-0009 USA
PHONE (913) 764-2452
FAX (913) 782-5104

CHASSIS
SCHEMATIC

SIZE	CAGE NO.	DWG NO	REV
B	41364	02-9520-80	09

SHEET 1 of 2

05-0019-02

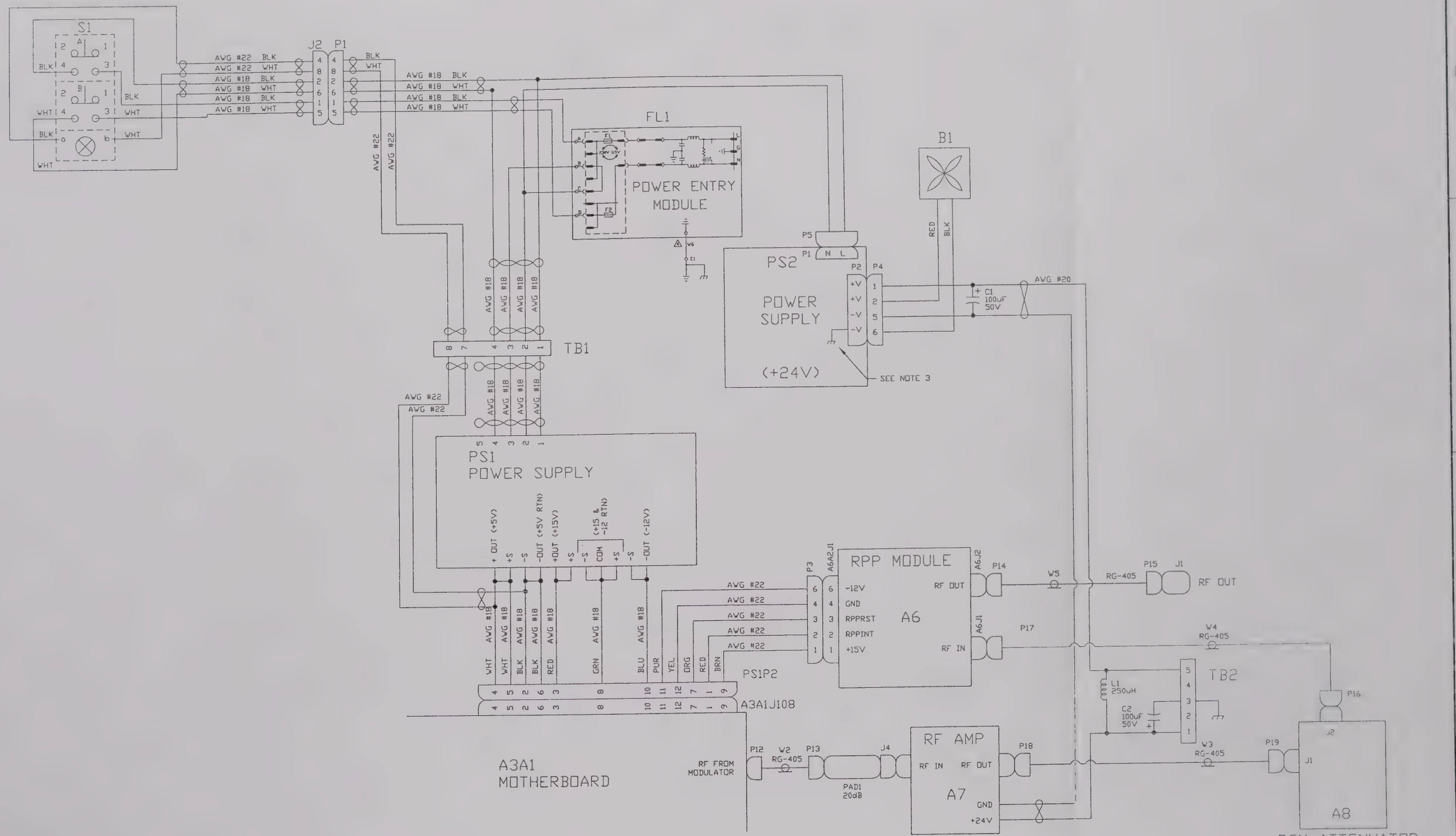

NOTES:
1. WHEN INSTALLING PS1, REMOVE JUMPER VW1 FOR +15V OPERATION.
2. REMOVE ALL JUMPERS BETWEEN POWER SUPPLY TRANSFORMER PRIMARY LEADS.
3. ADD 18 AWG JUMPER WIRE, ON BOTTOM OF PS2, FROM PS2P2 TO PC TRACE NEAR MOUNTING HOLE.

⚠4 W6 TO BE NO LONGER THAN 2".

SIZE	CAGE NO.	DWG NO	REV
B	41364	02-9520-80	09
			SHEET 2 of 2

05-0019-02

REVISIONS			
REV.	DESCRIPTION	DATE	APPROVED
1	CHANGE J1 FROM 30-2122-24 TO 30-2213-06	2/16/01	

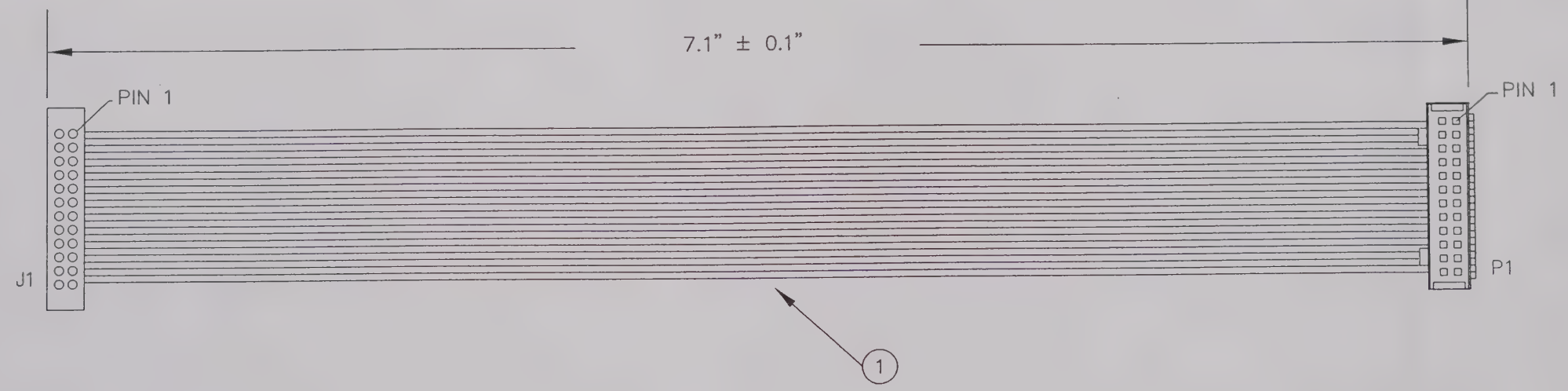

ITEM	QTY	PART NO.	DESCRIPTION	MFG. PART NO.
P1	1	30-2124-24	CONN RIBBON RCPT DUAL POL 24 POS	AMP 746294-5
J1	1	30-2213-06	CONN RIBBON HDR DBL RW PCMT .10SP 24 POS	3M 3924-0000T
2	1	30-9267-24	STRAIN RELIEF NOVO RCPT 24 POS	AMP 1-499252-0
1	AR	24-6028-24	WIRE RIBBON CABLE 28 AWG 24 CONDUCTOR	SPECTRA 843-135-2801-024

20-5900-00	01-0520-XX
NEXT ASS'Y	TOP BILL
UNIT	NAV 2000R

DIMENSIONS ARE IN INCHES
TOLERANCES ARE:
DECIMALS: .XX ±.01 .XXX ±.005
FRACTIONS: ± 1/64
ANGLES: ± 1/2°

MATERIAL: –

FINISH: –

BFGOODRICH AEROSPACE PROPRIETARY INFORMATION

APPROVALS	DATE
DRAWN B PAGE	9/23/91
ENG. DWH	11/22/91
ISSUED	2/16/01
FILE NAME 55052000.DWG	

BFGoodrich
Aerospace
JcAIR Test Systems

400 NEW CENTURY PARKWAY
NEW CENTURY, KS 66031-0009 USA
PHONE (913) 764-2452
FAX (913) 782-5104

CABLE
RIBBON 24 LINE

SIZE	CAGE NO.	DWG. NO.	REV.
B	41364	55-0520-00	01
			SHEET 1 of 1

05-0019-02

REVISIONS			
REV.	DESCRIPTION	DATE	APPROVED
1	CHANGE ITEM 3 FROM 30-2123-50 TO 30-2213-0C	2/16/01	[illegible]

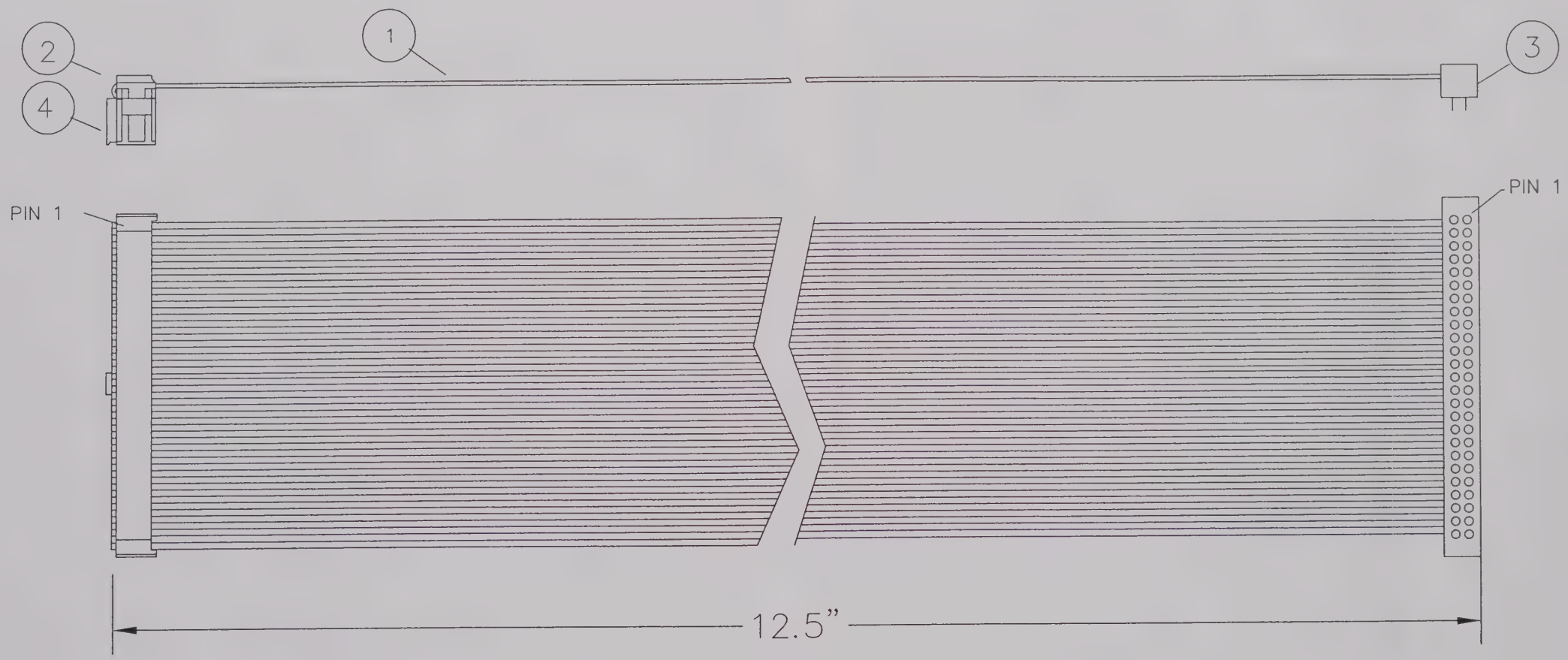

ITEM	QTY	PART NO.	DESCRIPTION	MFG. PART NO.
4	1	30-2101-50	CONN RIBBON RCPT CNT/MIL POS 50 POS	AMP 1-746286-0
3	1	30-2213-0C	CONN RIBBON HDR DBL RW PCMT .10SP 50 POS	3M 3950-0000T
2	1	30-9267-50	STRAIN RELIEF NOVO RCPT 50 POS	AMP 499252-4
1	AR	24-6028-50	WIRE RIBBON CABLE 28 AWG 50 CONDUCTOR	SPECTRA 843-135-2801-050

20-5900-00	01-0520-XX
NEXT ASS'Y	TOP BILL
UNIT: NAV 2000R	

DIMENSIONS ARE IN INCHES
TOLERANCES ARE:
DECIMALS: .XX ±.01 .XXX ±.005
FRACTIONS: ± 1/64
ANGLES: ± 1/2°

MATERIAL: –

FINISH: –

BFGOODRICH AEROSPACE PROPRIETARY INFORMATION

APPROVALS	DATE
DRAWN DWH	8/12/91
ENG. DWH	11/22/91
ISSUED [signature]	2/16/01
FILE NAME 55052003.DWG	

BFGoodrich Aerospace
JcAIR Test Systems
400 NEW CENTURY PARKWAY
NEW CENTURY, KS 66031-0009 USA
PHONE (913) 764-2452
FAX (913) 782-5104

CABLE RIBBON 50 LINE

SIZE	CAGE NO.	DWG. NO.	REV.
B	41364	55-0520-03	01

SHEET 1 of 1

05-0019-02

REVISIONS			
REV.	DESCRIPTION	DATE	APPROVED
1	CORRECT CABLE LENGTH	4/23/93	TLJ
2	REMOVE NOTE; ADD ITEM 2	07/21/97	S KIRK
3	CHANGE ITEM 2 (ADDED STRAIN RELIEF)	10/22/98	McDERMOTT
4	ADDED STRAIN RELIEF TO PARTS LIST	5/11/99	DW

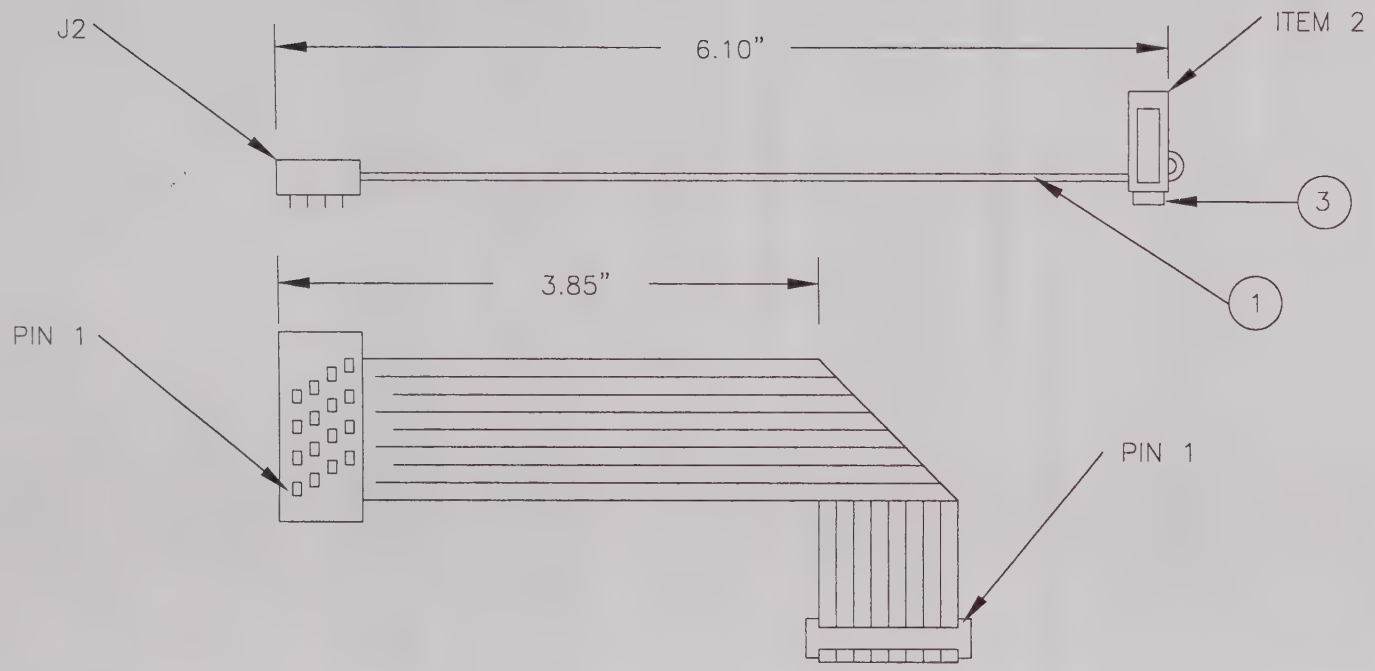

ITEM	QTY	PART NO.	DESCRIPTION	MFG. PART NO.
J2	1	30-2122-16	CONN RIBBON PADDLE BD 4 ROW 16 POS	AMP 111035-2
3	1	30-9267-16	STRAIN RELIEF NOVO RCPT 16 POS	AMP 499252-8
2	1	30-2105-16	CONN RIBBON RCPT CNT/MIL POL 16 POS W/SR	AMP 499936-3
1	6.1 IN	24-6028-16	WIRE RIBBON CABLE 28 AWG 16 COND	SPECTRA-STRIP 843-135-2801-016

20-5745-XX	01-0520-XX
NEXT ASS'Y	TOP BILL
UNIT: NAV 2000R	

DIMENSIONS ARE IN INCHES
TOLERANCES ARE:
DECIMALS: .XX ±.01 .XXX ±.005 FRACTIONS: ± 1/64 ANGLES: ± 1/2°

MATERIAL: –

FINISH: –

BFGOODRICH AEROSPACE PROPRIETARY INFORMATION

APPROVALS	DATE
DRAWN BLP	11/20/92
ENG.	
ISSUED	

FILE NAME: 55052051.DWG

BFGoodrich Aerospace
JcAIR Test Systems
400 NEW CENTURY PARKWAY
NEW CENTURY, KS 66031-0009 USA
PHONE (913) 764-2452
FAX (913) 782-5104

KEYBD TO DISPLAY CABLE

SIZE	CAGE NO.	DWG. NO.	REV.
A	41364	55-0520-51	04

SHEET 1 of 1

NAV 2000R PERFORMANCE VERIFICATION TEST PROCEDURES

S/N: _____
BY: _____
DATE: _____
MOD STATUS: _____

1.0 INTRODUCTION

The following performance verification test procedures ensure NAV2000R operation within published specifications. A summary of the tested specifications is found in Table 1. All tests can be performed without access to the interior of the NAV 2000R. A 30 minute warm-up time for the NAV 2000R is required prior to performing any of the tests found in the following performance procedures.

Paragraphs and Equipment identified with an asterisk (*) are not required for periodic calibration.

2.0 REQUIRED TEST EQUIPMENT

Table 2 lists recommended measurement standards required to properly test and calibrate the NAV 2000R. The pertinent performance specifications of each piece of equipment are listed to enable a functional equivalent (or better) to be substituted for the recommended equipment. All equipment must be properly calibrated before NAV 2000R testing or calibration. Most equipment requires a 30 minute warm-up time before specifications are guaranteed.

3.0 TEST & CALIBRATION SET UP

It is assumed the user has operational knowledge of the various measurement standards required to test the NAV 2000R. It is also assumed that cables, connectors, and adapters will be supplied by the one performing the tests.

To perform the NAV 2000R performance test procedures, set up the equipment as shown in Figure 1 - Test Setup. Ensure the POWER input card and fuse have been properly selected for the desired operating voltage. See paragraph 3.4 of the NAV 2000R Maintenance/Overhaul Manual if required. Connect the Measuring Receiver to the type N connector labeled "RF OUTPUT. Removing NAV 2000R covers is required only if adjustments are necessary.

The following test procedures assume adjustment has been completed according to the NAV 2000R calibration procedure. If it is desired to test only a specific feature of the NAV 2000R (i.e. RF level test, AM distortion test, AM % MOD test, etc.), simply perform the procedure for that feature.

TABLE 1
NAV 2000R PERFORMANCE VERIFICATION TEST SPECIFICATION SUMMARY

PARAMETER/FUNCTION	PERFORMANCE SPECIFICATION	TEST METHOD
SELF TEST	RAM Test, ROM Test, presence and and communication with cards and modules, audio and RF level Checks, and displays software versions	NAV 2000R Power ON Self Test
DISPLAY	All elements illuminate	NAV 2000R Display Test
KEYBOARD	All keys function	Check function of each
NON-VOLATILE MEMORY	Battery Backed-Up RAM Test	Save & cycle power
***GPIB INTERFACE**	GPIB Communication	Test Interface Communication
INTERNAL MODULATING SIGNALS		
Audio Frequency Range	10 Hz to 18 kHz	
Frequency Accuracy	< ± 50 ppm, 10 Hz to 18 kHz	Audio Frequency Counter
Frequency Resolution	0.1 Hz, Tested at 10.0 Hz	Audio Frequency Counter
Audio Distortion	< 0.1% THD	Distortion Analyzer
Audio Level	1.414 Vrms ± 0.025 Vrms @ 1.0 kHz	Voltmeter
Audio Frequency Response	10 Hz to 12.0 kHz: ± 0.04 Vrms Relative to 1.0 kHz Reading 12.0 kHz to 18.0 kHz: ± 0.10 Vrms Relative to 1.0 kHz Reading	Voltmeter
RF OUTPUT		
RF Frequency Range	150.0 kHz to 450.0 MHz	
Absolute Frequency Accuracy	< ± 2 ppm @ 100 MHz	RF Frequency Counter
Relative Frequency Accuracy	< ± 5 Hz for < 100 kHz Steps Relative to 100 MHz	RF Frequency Counter
External Reference Accuracy	< ± 2 ppm (with 10.000 MHz, < ± 2 ppm reference at EXT REF IN)	RF Frequency Counter
RF Level Test Frequency Range	2.5 MHz to 350 MHz	
*RF Output Level Range	+7 dBm to -120 dBm	Measuring Receiver
Level Accuracy	± 1.0 dB for +7 dBm to -57 dBm levels *± 2.0 dB for -57 dBm to -103 dBm levels *± 3.0 dB for -103 dBm to -120 dBm levels	Measuring Receiver
Fine Level Resolution	0.1 dB increments	Measuring Receiver
RF Frequency Response Reference	-10.0 dBm ± 1.0 dB @ 125 MHz	Measuring Receiver
Relative RF Frequency Response	± 0.5 dB Relative to Reference Reading	Measuring Receiver
RF Output VSWR	< 1.5, 300 kHz to 450 MHz	Network Analyzer

TABLE 1 (Cont.)
NAV 2000R PERFORMANCE VERIFICATION TEST SPECIFICATION SUMMARY

PARAMETER/FUNCTION	PERFORMANCE SPECIFICATION	TEST METHOD
SPECTRAL PURITY		
Harmonic Suppression	< -30 dBc, 200 kHz to 400 MHz	Spectrum Analyzer
Non-Harmonic Levels	< -60 dBc at > 5 kHz from Carrier	Spectrum Analyzer
*Phase Noise	150.000 kHz to 56.25 MHz RF Carrier Band: < -87 dBc with 10 Hz BW at > ± 15 kHz 56.250 MHz to 112.500 MHz RF Carrier Band: < -87 dBc with 10 Hz BW at > ± 10 kHz 112.500 MHz to 225.000 MHz RF Carrier Band: < -87 dBc with 10 Hz BW at > ± 10 kHz 225.000 MHz to 450.000 MHz RF Carrier Band: < -87 dBc with 10 Hz BW at > ± 10 kHz	Spectrum Analyzer
Residual AM	150.000 kHz to 56.250 MHz RF Carrier Band: < 0.1% 56.250 MHz to 112.500 MHz RF Carrier Band: < 0.1% 112.500 MHz to 225.000 MHz RF Carrier Band: < 0.1% 225.000 MHz to 450.000 MHz RF Carrier Band: < 0.1%	Measuring Receiver
Residual FM	150.000 kHz to 56.250 MHz RF Carrier Band: < 25 Hz 56.250 MHz to 112.500 MHz RF Carrier Band: < 10 Hz 112.500 MHz to 225.000 MHz RF Carrier Band: < 16 Hz 225.000 MHz to 450.000 MHz RF Carrier Band: < 25 Hz	Measuring Receiver

TABLE 1 (Cont.)
NAV 2000R PERFORMANCE VERIFICATION TEST SPECIFICATION SUMMARY

PARAMETER/FUNCTION	PERFORMANCE SPECIFICATION	TEST METHOD
AMPLITUDE MODULATION		
Range	0% to 99%	Measuring Receiver
Resolution	0.01% Setting Increments	Measuring Receiver
% AM Test RF Carrier Range 1	250 kHz to 250 MHz (10% to 95% at 1 kHz)	
% AM Test RF Carrier Range 2	250 MHz to 350 MHz (10% to 80% at 1 kHz)	
% AM Accuracy	± 2% of Setting	Measuring Receiver
% AM Distortion	2% Maximum at 1 kHz	Measuring Receiver
% AM Audio Frequency Response	(50% AM Setting at 125 MHz & -10.0 dBm) < ± 2.0% of Setting for 50% AM, 30 Hz up to 15.0 kHz 48.5% < % AM < 50.5% at 15.0 kHz 46.0% < % AM < 50.0% at 18.0 kHz	Measuring Receiver
External % AM Test	(50% AM Setting at 125 MHz & -10.0 dBm) < ± 3% of % AM Setting, 30 Hz to 15.0 kHz 47.5% < % AM < 50.5% at 20.0 kHz	Measuring Receiver
VOR BEARING SIMULATION		
Radial Range	0 to 359.99 Degrees	VOR Bearing Calibrator
Radial Accuracy (Audio)	± 0.01 Degree of selected radial, relative to calibration standard used during calibration	VOR Bearing Calibrator
Radial Accuracy (RF)	± 0.05 Degrees of selected radial, relative to calibration standard used during calibration	VOR Bearing Calibrator
AUDIO DDM ACCURACY	LOC (Localizer) 0.000 ± 0.0003 DDM 0.046 ± 0.0012 DDM 0.093 ± 0.0021 DDM 0.155 ± 0.0034 DDM 0.200 ± 0.0053 DDM	Multimeter
RF DDM ACCURACY	LOC (Localizer) 0.000 ± 0.0003 DDM 0.046 ± 0.0012 DDM 0.093 ± 0.0021 DDM 0.155 ± 0.0034 DDM 0.200 ± 0.0053 DDM G/S (Glideslope) 0.000 ± 0.0003 DDM 0.045 ± 0.0012 DDM 0.091 ± 0.0021 DDM 0.175 ± 0.0038 DDM 0.400 ± 0.0083 DDM	RF Detector/Multimeter
SELCAL ACCURACY	Pulse #1 Time: 0.8 ± 0.1 sec Pulse #2 Time: 0.8 ± 0.1 sec Gap Time: 200 ± 100 mSec Pulse Amplitude: 4.0 ± 0.5 Vpp	Oscilloscope

3.1 MINIMUM USE SPECIFICATIONS

Minimum Use Specifications (MUS) are the calculated minimum performance specifications criteria required by the measurement (MS) and support M&TE utilized for comparison measurements in the Calibration Procedure (CP) process.

The MUS is developed through uncertainty analysis and is calculated through assignment of a defined and documented uncertainty/accuracy ratio or margin between the specified tolerances of the unit being calibrated (verified) and the capability (uncertainty specification) required of the measurement standards system. MUS is required to assist a measurement specialist in the evaluation of existing or selection of alternate measurement standards equipment. Representative types (manufacturer, model/option) are listed that are applicable however, substitution is acceptable where the required minimum-performance-specification requirements are met.

The uncertainty/accuracy ratio applied in this CP is 4:1 and any exceptions are indicated.

CAUTION:

The instructions in this CP relate specifically to the equipment and conditions listed elsewhere in this document. If other equipment is substituted, the information and instructions must be interpreted and revised accordingly.

MS and SM&TE Environment Range Requirements: Temp 65 to 85 degrees F, RH 35 to 75%

MS and SM&TE Warm-up/Stabilization Period Requirements: 30 minutes

TABLE 2
NAV 2000R PERFORMANCE VERIFICATION TEST EQUIPMENT REQUIREMENTS
(SPECIFICATION SUMMARY & RECOMMENDATION)

NOTE: THE FOLLOWING EQUIPMENT OR FUNCTIONAL EQUIVALENT IS REQUIRED FOR THESE TESTS

EQUIPMENT DESCRIPTION (RECOMMENDED MODEL)	INSTRUMENT FUNCTION	********** REQUIREMENT ********** RANGE	ACCURACY
MULTIMETER	AC VOLTMETER	1 Hz to 40 Hz	.007% of Reading +.004% of Range
(HP 3458A)		40 Hz to 1 kHz	.007% of Reading +.002% of Range
		1 kHz to 20 kHz	.014% of Reading +.002% of Range
MEASURING RECEIVER	RF POWER METER 150 kHz to 450 MHz	-120 dBm to +7 dBm	+/- 0.25 dB
(HEWLETT-PACKARD HP8902A WITH HP11722A POWER SENSOR)	% AM MEASUREMENT 20 Hz to 50 Hz AM	5% to 99%	±3% Reading ±1 Digit
	50 Hz to 20 kHz AM	5% to 99%	±1% Reading ±1 Digit
DISTORTION ANALYZER (HEWLETT-PACKARD HP 339A)	AUDIO DISTORTION METER 10 Hz to 5 kHz	0.01% to 100% THD	+1,-2 dB
SPECTRUM ANALYZER (HEWLETT-PACKARD HP 8561B)	SPECTRUM ANALYZER	150 kHz-1.8 GHz, 50 Ohms	
	Amplitude	-90 dBm to +10 dBm	± 1.0 dB relative
	Frequency	150 kHz-1.8 GHz	
	Spectral Purity	<(-100+20log(n))dBc/Hz @ 30 kHz offset	
	Resolution BW	(-3dB)	10 Hz to 2 MHz
	Video BW	1 Hz to 3 MHz	
	Dynamic Range	Signal to Distortion, Harmonic 81 dB	
FREQUENCY COUNTER (TEKTRONIC CMC250)	AUDIO FREQUENCY MEASUREMENT	1 KHz to 20 MHz	±10 ppm (or ± 1 digit)
RF FREQUENCY COUNTER (PHILLIPS PM 6676)	FREQUENCY MEASUREMENT	20 MHz to 450 MHz	±0.1 ppm (or ±1 digit)
VOR BEARING CALIBRATOR (COLLINS 478A-3) (ZIFOR III)	VOR BEARING CALIBRATOR	0 to 360 Degrees	< 0.02 Degrees
*NETWORK ANALYZER (HEWLETT-PACKARD 8753C with 85044A TRANSMISSION REFLECTION TEST SET)	VSWR MEASUREMENT	300 kHz to 450 MHz	< 0.02 uncertainty
OSCILLOSCOPE (TEKTRONIX 2235A)	OSCILLOSCOPE Time Base	0.5 s/div - 0.05 us/div	± 2.0%
	Amplitude 2 mV/div - 5.0 V/div	± 2.0%	
RF DETECTOR/AMPLIFIER (JcAIR 01-0817-00)	RF DETECTOR	100 MHz to 400 MHz	

TABLE 2 (CONT)
NAV 2000R PERFORMANCE VERIFICATION TEST EQUIPMENT REQUIREMENTS
(SPECIFICATION SUMMARY & RECOMMENDATION)

NOTE: THE FOLLOWING EQUIPMENT OR FUNCTIONAL EQUIVALENT IS REQUIRED FOR THESE TESTS

EQUIPMENT DESCRIPTION (RECOMMENDED MODEL)	INSTRUMENT FUNCTION	********** REQUIREMENT ********** RANGE	ACCURACY
* SIGNAL GENERATOR (HEWLETT-PACKARD HP 8656B)	SIGNAL GENERATOR Frequency RF Level	 .1 to 900MHz -127 to +13 dBm	
* LINEAR RF AMPLIFIER (MINI-CIRCUITS ZHL-1-2W)	AMPLIFIER Frequency Gain	 5 to 500 Mhz 29 db Min	
* 3 db SMA ATTENTUATOR (WEINSCHEL 3330-3)	ATTENTUATOR Frequency Attentuation	 DC to 18 Ghz 3 dB	

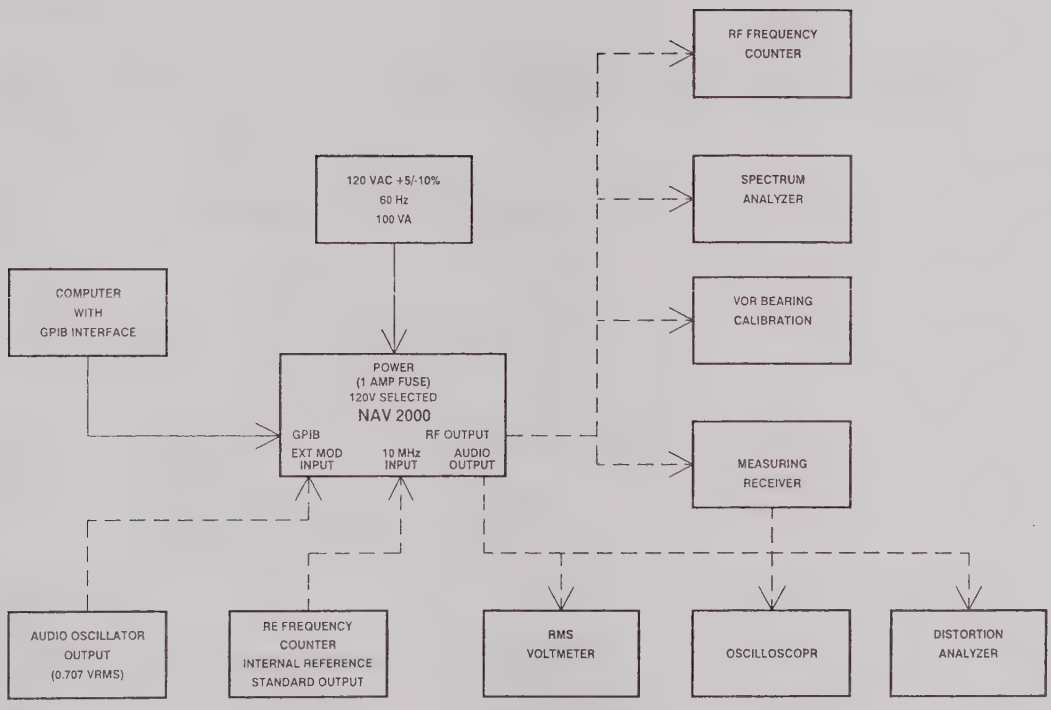

FIGURE 1: NAV 2000R TEST SET-UP

4.0 TEST PROCEDURE

By completing the following NAV 2000R test procedure proper operation and functioning of the NAV 2000R is verified. This is achieved by comparing the performance of the unit under test (UUT) to the published performance specifications.

Paragraphs and Equipment identified with an asterisk (*) are not required for periodic calibration.

4.1 SELF TEST

The NAV 2000R self test verifies the integrity of all internal RAM and ROM, checks for the presence of cards and modules, and checks the operation of the internal cards and modules.

___ 4.1.1 Turn on the NAV 2000R.

___ 4.1.2 Verify the following system diagnostics indicate a pass condition:

___ CPU ROM: *PASS*
___ CPU RAM: *PASS*
___ DSP BOARD: *PASS*
___ RF GENERATOR: *PASS*
___ RF MODULATOR: *PASS*

___ 4.1.3 Record Software Version numbers displayed during power- up.

CPU board Version _____
DSP board Version _____
Generator Version _____

4.2 DISPLAY TEST

The following verifies proper display element operation.

___ 4.2.1 Select Utility Menu by pressing and holding ADF mode button. Select option 6, EXECUTE DISPLAY TEST and verify all elements of display light.

NOTE:

Display Test is indicated by words "PRESS KEY TO STOP" momentarily appearing in random locations on screen. After verifying all display elements operate properly, press any key to stop the Display Test.

LIMIT: All Display Elements Light

4.3 KEYBOARD TEST

The following verifies all front panel keys function.

___ 4.3.1 Press each of five mode keys (VOR, LOC/G/S, ADF, MKR, COM & RF/ON/OFF) and verify display indicates proper mode.

___ 4.3.2 Go to VOR mode and verify each "BEARING DEGREES" hot key (0-330 deg) is echoed by display.

___ 4.3.3 Verify each "CURSOR CONTROL" key by pressing each and watching highlighted area move on the display. Move the cursor to the RF LEVEL field and press "SEL". Verify field is selected by observing the field darken and flashing field pointers light. Press "SEL" key to return to highlight.

___ 4.3.4 Verify numeric, +/-, decimal point, CLR, and ENT keys by observing effect in RF LEVEL field. When finished, enter -10 dBm in RF LEVEL field.

___ 4.3.5 Verify operation of RF/ON/OFF key by going to COM mode and press the RF/ON/OFF key once. Verify display indicates RF OFF. Press key once more to turn RF back on

4.4 NON-VOLATILE MEMORY TEST

This test verifies the NAV 2000R non-volatile battery backed memory. This is accomplished by storing two NAV 2000R VOR set-ups, cycling power, and verifying that the power-down state and a stored register are remembered.

___ 4.4.1 If not in VOR mode, select VOR mode by pressing "VOR" key. Recall Default Register 0 by pressing "RCL" key and then "0" and "ENT". Move the cursor to the VOR Bearing Field, using cursor keys, and enter 48 degree bearing by pressing "4", "8", and "ENT".

___ 4.4.2 Store VOR setup at location 48 by pressing "STO" key and "4", "8", and "ENT" for register number.

___ 4.4.3 Enter 49 deg for VOR bearing (see 4.4.1) and store this 49 deg bearing VOR set-up to register 49 (see 4.4.2).

___ 4.4.4 Turn the NAV 2000R OFF. Wait 10 seconds. Turn the NAV 2000R ON.

___ 4.4.5 After a successfully completed self-test, verify display indicates power off conditions by verifying the display shows VOR mode with 49 degree bearing.

(Y/N) Remembered power-off state through power cycle

___ 4.4.6 Recall setup 48 by pressing "RCL", "4", "8", and "ENT".
Verify display is in VOR mode with 48 degree bearing.

(Y/N) Properly recalled memory register through power cycle

*4.5 GPIB INTERFACE TEST

Verification of the GPIB interface is accomplished by sending a command to the NAV2000R and observing a proper response.

___ 4.5.1 Connect a host computer with a GPIB interface to the NAV 2000R. Set the GPIB address appropriately for the test environment through option 1 of the Utility Menu. To gain access to the Utility Menu, press and hold the VOR key. Choose option 1. Send "MODE=LOC." Verify command was properly received and executed by observing NAV 2000R display. Display should indicate NAV 2000R is in the LOC mode of operation. Send "MODE=VOR." Verify command was properly received and executed by observing NAV 2000R display indicates VOR mode of operation.

NOTE:

The NAV 2000R recognizes EOI as an end of transmission rather than a carriage return (CR)-line feed (LF) pair.

___ 4.5.2 Return the NAV 2000R to Local operation mode by pressing "CLR/LCL" button.

4.6 INTERNAL AUDIO MODULATING SIGNAL TESTS

The following procedures verify specification compliance of the audio output signal for frequency accuracy, frequency resolution, frequency range, audio distortion, and signal level.

4.6.1 Audio Frequency Accuracy & Resolution

The frequency accuracy and resolution of the internally generated audio signal is verified using a Audio Frequency Counter.

RANGE:	10 Hz to 18 kHz
SPECIFICATIONS:	
Frequency Accuracy	±50 ppm
Frequency Resolution	± 0.10 Hz

___ 4.6.1.1 Connect the NAV 2000R AUDIO OUTPUT, on rear of unit, to the Audio Frequency Counter high impedance input and set to measure Audio Input frequency.

___ 4.6.1.2 Set the NAV 2000R to COM mode, at 100 MHz and 0.0 dBm out with 0% Mod for TONE 2 and 50% MOD at 10.0 kHz for TONE 1.

___ 4.6.1.3 Record frequency counter indicated audio frequency below.

_____ LIMIT: 10000.0 ± 0.5 Hz (< ±50 ppm)

___ 4.6.1.4 Set TONE 1 audio frequency to 18000.0 Hz and record the indicated frequency counter frequency below.

_____ LIMIT: 18000.0 ± 0.9 Hz (< ±50 ppm)

___ 4.6.1.5 Set TONE 1 audio frequency to 10.0 Hz and record the indicated frequency counter frequency below.

_____ LIMIT: 10.0 ± 0.0005 Hz (< ±50 ppm)

___ 4.6.1.6 To verify the NAV 2000R's resolution, set TONE 1 audio frequency to 10.1 Hz and record the indicated frequency counter frequency below.

_____ LIMIT: 4.6.1.5 Reading +0.1 Hz ±0.1 Hz

4.6.2 Audio Distortion, Output Level, & Frequency Response

The internally generated audio is provided as an output. Audio Distortion specifications are verified using an audio distortion analyzer. Absolute and relative audio level specifications are verified using a Voltmeter.

RANGE:	10 Hz to 18 kHz
SPECIFICATIONS:	
Distortion	< 0.1% THD
Level	1.414 ± 0.025 Vrms @ 1 kHz
Freq Resp.	1.0 kHz Reading ± 0.04 Vrms, 10 Hz to 12 kHz 1.0 kHz Reading ±0.10 Vrms, 12 kHz to 18 kHz

___ 4.6.2.1 Connect the NAV 2000R AUDIO OUTPUT, on rear of unit, to Audio Distortion Analyzer.

___ 4.6.2.2 Select the COM mode, 100.0 MHz at 0.0 dBm, set % MOD of TONE 2 to 0%, and set TONE 1 frequency to 1000 Hz at 50% MOD.

___ 4.6.2.3 Measure and record distortion in the % THD column of Table 3 and adjusting audio frequency appropriately.

___ 4.6.2.4 Connect the NAV 2000R AUDIO OUTPUT to the voltmeter and set voltmeter to measure Vrms with a resolution of 4 digits or better.

___ 4.6.2.5 Record in Vrms column of Table 3 the voltmeter indication for the various TONE 1 frequencies listed.

TABLE 3 - INTERNAL AUDIO DISTORTION AND LEVEL TESTS

	AUDIO FREQ SETTING	% THD DIST	% THD LIMIT	Vrms	Vrms LIMIT
Reference--->	1.000 kHz	____	< 0.1%	____	1.414 ± .025
	20.00 Hz	____	< 0.1%	____	Ref ± 0.04 Vrms
	*30.00 Hz	____	< 0.1%	____	Ref ± 0.04 Vrms
	*90.00 Hz	____	< 0.1%	____	Ref ± 0.04 Vrms
	*150.0 Hz	____	< 0.1%	____	Ref ± 0.04 Vrms
	*12.000 kHz	____	< 0.1%	____	Ref ± 0.04 Vrms
	18.000 kHz	____	< 0.1%	____	Ref ± 0.10 Vrms

4.7 RF OUTPUT TESTS

RF carrier level specifications are tested over output level range at different frequencies. The frequency response of the un-modulated RF signal is checked to be within specification.

4.7.1 Absolute and Relative Frequency Accuracy

The accuracy conformance of RF frequency to specification is achieved by counting the un-modulated RF signal using an accurate RF frequency counter. Relative accuracy verification is obtained by noting the difference between the programmed frequency change and the measured reference frequency.

RANGE: 150 kHz to 450 MHz

SPECIFICATIONS:

Frequency Accuracy <± 2.0 ppm
Relative Accuracy ± 5 Hz

___ 4.7.1.1 Connect the NAV 2000R RF OUTPUT to the RF frequency counter 50 Ohm input.

___ 4.7.1.2 Select the COM Mode, 100 MHz RF at 0.0 dBm level. Turn modulation OFF by setting TONE 1 to 0% MOD and TONE 2 to 0% MOD.

___ 4.7.1.3 Complete Table 4 by recording the frequency counter measurements for the corresponding NAV 2000R RF frequency settings.

TABLE 4 - ABSOLUTE AND RELATIVE FREQUENCY ACCURACY

	RF FREQ SETTING (MHZ)	MEASURED FREQ(MHZ)	LIMIT
Reference ----->	100.00000	_____	within ± 200 Hz (or < ±2 ppm)
	100.00001	_____	Measured Reference + 10 Hz ± 5 Hz
	100.00010	_____	Measured Reference + 100 Hz ± 5 Hz
	100.00100	_____	Measured Reference + 1.0 kHz ± 5 Hz
	100.01000	_____	Measured Reference + 10.0 kHz ± 5 Hz
	100.10000	_____	Measured Reference + 100.0 kHz ± 5 Hz

___ 4.7.1.4 Set the NAV 2000R RF Frequency to .150 MHz and record the frequency counter frequency below.

_____ LIMIT: .150 MHz ± .3 Hz (<± 2 ppm)

___ 4.7.1.5 Set the NAV 2000R RF Frequency to 450.00 MHz and record the frequency counter frequency below.

_____ LIMIT: 450.0 MHz ± 900 Hz

4.7.2 External Reference Test

NAV 2000R operation using the EXT REF INPUT (on rear panel) as a frequency standard is verified.

___ 4.7.2.1 Select COM mode using 100.00000 MHz, 0.0 dBm output with TONE 1 and TONE 2 at 0% MOD. Connect the RF OUTPUT to the RF Frequency Counter and record the frequency counter indication.

_____ LIMIT: 100.000000 MHz ± 200 Hz

___ 4.7.2.2 Connect the RF Frequency Counter 10 MHz INT STD OUT to the NAV 2000R EXT REF IN (on rear panel). Record the frequency counter indication.

_____ LIMIT: 100.000000 MHz ± 1 Hz

___ 4.7.2.3 Disconnect INT STD OUT from NAV 2000R EXT REF IN.

4.7.3 Level Accuracy and Level Range

A Measuring Receiver is used to verify output level accuracy and range. By checking each pad, the output attenuator and measuring output power level at different frequencies, the level accuracy is determined. The level range is verified by obtaining measurements at +7 dBm and -120 dBm.

RANGE: 150 KHz to 450 MHz

SPECIFICATIONS:

Level Range	+7 dBm to -120 dBm
Level Accuracy	± 1.0 dBm for +7 dBm to -57 dBm levels ± 2.0 dBm for -57 dBm to -103 dBm levels ± 3.0 dBm for -103 dBm to -120 dBm levels

___ 4.7.3.1 In COM mode with RF at 2.5 MHz and 0.0 dBm output, set % MOD of TONE 1 & TONE 2 to 0%.

___ 4.7.3.2 Using the Measuring Receiver, complete Table 5 by recording calibrated TUNED RF LEVEL while adjusting NAV 2000R RF frequency appropriately. If you are using the recommended HP8902A Measuring Receiver, the procedure listed below can be used to obtain calibrated TUNED RF LEVEL measurements at each of the frequencies listed in Table 5. If another Measuring Receiver is used, consult the manufacturers' operation manual for proper operating procedures.

NOTE:

The following procedure obtains calibrated TUNED RF LEVEL measurements using the HP8902A Measuring Receiver. A calibration is performed for each NAV 2000R RF frequency setting at +7 dBm RF level. A Measuring Receiver RECAL(ibration) is performed at -40.0 dBm and at -80.0 dBm.

___ A. Set NAV 2000R RF Frequency according to Table 5

___ B. Set NAV 2000R RF Level to +7 dBm

___ C. Enter Measuring Receiver measurement frequency

___ D. Set Measuring Receiver to measure TUNED RF LEVEL

___ E. Record Measuring Receiver TUNED RF LEVEL indication in Table 5.

___ F. Set NAV 2000R to +6.0 dBm, +5.0 dBm, +3.0 dBm, -1.0 dBm, -9.0 dBm, and -25.0 dBm recording each Measuring Receiver TUNED RF LEVEL in Table 5

___ G. Set NAV 2000R to -40.0 dBm and RECAL(ibrate) Measuring Receiver when RECAL indicator lights

___ H. Record Measuring Receiver TUNED RF LEVEL in Table 5

___ I. Set NAV 2000R to -57.0 dBm and record Measuring Receiver TUNED RF LEVEL in Table 5

___ J. Set NAV 2000R to -80.0 dBm and RECAL(ibrate) Measuring Receiver when RECAL indicator lights

___ K. Record Measuring Receiver TUNED RF LEVEL in Table 5

___ L. Set NAV 2000R to -113.0 dBm and -120.0 dBm recording each Measuring Receiver TUNED RF LEVEL in Table 5

___ M. Repeat A-L for each NAV 2000R Frequency of Table 5

TABLE 5 - RF POWER LEVEL ACCURACY & RANGE OVER FREQUENCY

FREQ (MHZ)	SELECTED LEVEL	MEASURED LEVEL(dBm)	LIMIT
2.500 MHz	+7.0 dBm	_____	+7.0 dBm± 1.00 dB
	+6.0 dBm	_____	+6.0 dBm± 1.00 dB
	+5.0 dBm	_____	+5.0 dBm± 1.00 dB
	+3.0 dBm	_____	+3.0 dBm± 1.00 dB
	-1.0 dBm	_____	-1.0 dBm± 1.00 dB
	-9.0 dBm	_____	-9.0 dBm± 1.00 dB
	-25.0 dBm	_____	-25.0 dBm± 1.00 dB
	-40.0 dBm	_____	-40.0 dBm± 1.00 dB
	*-57.0 dBm	_____	-57.0 dBm± 2.00 dB
	*-80.0 dBm	_____	-80.0 dBm± 2.00 dB
	*-113.0 dBm	_____	-113.0 dBm± 3.00 dB
	*-120.0 dBm		-120.0 dBm± 3.00 dB
*25.000 MHz	+7.0 dBm	_____	+7.0 dBm± 1.00 dB
	+6.0 dBm	_____	+6.0 dBm± 1.00 dB
	+5.0 dBm	_____	+5.0 dBm± 1.00 dB
	+3.0 dBm	_____	+3.0 dBm± 1.00 dB
	-1.0 dBm	_____	-1.0 dBm± 1.00 dB
	-9.0 dBm	_____	-9.0 dBm± 1.00 dB
	-25.0 dBm	_____	-25.0 dBm± 1.00 dB
	-40.0 dBm	_____	-40.0 dBm± 1.00 dB
	*-57.0 dBm	_____	-57.0 dBm± 2.00 dB
	*-80.0 dBm	_____	-80.0 dBm± 2.00 dB
	*-113.0 dBm	_____	-113.0 dBm± 3.00 dB
	*-120.0 dBm	_____	-120.0 dBm± 3.00 dB
*75.000 MHz	+7.0 dBm	_____	+7.0 dBm± 1.00 dB
	+6.0 dBm	_____	+6.0 dBm± 1.00 dB
	+5.0 dBm	_____	+5.0 dBm± 1.00 dB
	+3.0 dBm	_____	+3.0 dBm± 1.00 dB
	-1.0 dBm	_____	-1.0 dBm± 1.00 dB
	-9.0 dBm	_____	-9.0 dBm± 1.00 dB
	-25.0 dBm	_____	-25.0 dBm± 1.00 dB
	-40.0 dBm	_____	-40.0 dBm± 1.00 dB
	*-57.0 dBm	_____	-57.0 dBm± 2.00 dB
	*-80.0 dBm	_____	-80.0 dBm± 2.00 dB
	*-113.0 dBm	_____	-113.0 dBm± 3.00 dB
	*-120.0 dBm	_____	-120.0 dBm± 3.00 dB
125.000 MHz	+7.0 dBm	_____	+7.0 dBm± 1.00 dB
	+6.0 dBm	_____	+6.0 dBm± 1.00 dB
	+5.0 dBm	_____	+5.0 dBm± 1.00 dB
	+3.0 dBm	_____	+3.0 dBm± 1.00 dB
	-1.0 dBm	_____	-1.0 dBm± 1.00 dB
	-9.0 dBm	_____	-9.0 dBm± 1.00 dB
	-25.0 dBm	_____	-25.0 dBm± 1.00 dB
	-40.0 dBm	_____	-40.0 dBm± 1.00 dB
	*-57.0 dBm	_____	-57.0 dBm± 2.00 dB
	*-80.0 dBm	_____	-80.0 dBm± 2.00 dB

TABLE 5 (Con't.) - RF POWER LEVEL ACCURACY & RANGE OVER FREQUENCY

FREQ (MHZ)	SELECTED LEVEL	MEASURED LEVEL(dBm)	LIMIT
125.000 MHz (Con't.)	*-113.0 dBm	_____	-113.0 dBm± 3.00 dBm
	*-120.0 dBm	_____	-120.0 dBm± 3.00 dBm
255.000 MHz	+7.0 dBm	_____	+7.0 dBm± 1.00 dBm
	+6.0 dBm	_____	+6.0 dBm± 1.00 dB
	+5.0 dBm	_____	+5.0 dBm± 1.00 dB
	+3.0 dBm	_____	+3.0 dBm± 1.00 dB
	-1.0 dBm	_____	-1.0 dBm± 1.00 dB
	-9.0 dBm	_____	-9.0 dBm± 1.00 dB
	-25.0 dBm	_____	-25.0 dBm± 1.00 dB
	-40.0 dBm	_____	-40.0 dBm± 1.00 dB
	*-57.0 dBm	_____	-57.0 dBm± 2.00 dB
	*-80.0 dBm	_____	-80.0 dBm± 2.00 dB
	*-113.0 dBm	_____	-113.0 dBm± 3.00 dB
	*-120.0 dBm	_____	-120.0 dBm± 3.00 dB
355.000 MHz	+7.0 dBm	_____	+7.0 dBm± 1.00 dB
	+6.0 dBm	_____	+6.0 dBm± 1.00 dB
	+5.0 dBm	_____	+5.0 dBm± 1.00 dB
	+3.0 dBm	_____	+3.0 dBm± 1.00 dB
	-1.0 dBm	_____	-1.0 dBm± 1.00 dB
	-9.0 dBm	_____	-9.0 dBm± 1.00 dB
	-25.0 dBm	_____	-25.0 dBm± 1.00 dB
	-40.0 dBm	_____	-40.0 dBm± 1.00 dB
	*-57.0 dBm	_____	-57.0 dBm± 2.00 dB
	*-80.0 dBm	_____	-80.0 dBm± 2.00 dB
	*-113.0 dBm	_____	-113.0 dBm± 3.00 dB
	*-120.0 dBm	_____	-120.0 dBm± 3.00 dB
449.000 MHz	+7.0 dBm	_____	+7.0 dBm± 1.00 dB
	+6.0 dBm	_____	+6.0 dBm± 1.00 dB
	+5.0 dBm	_____	+5.0 dBm± 1.00 dB
	+3.0 dBm	_____	+3.0 dBm± 1.00 dB
	-1.0 dBm	_____	-1.0 dBm± 1.00 dB
	-9.0 dBm	_____	-9.0 dBm± 1.00 dB
	-25.0 dBm	_____	-25.0 dBm± 1.00 dB
	-40.0 dBm	_____	-40.0 dBm± 1.00 dB
	*-57.0 dBm	_____	-57.0 dBm± 2.00 dB
	*-80.0 dBm	_____	-80.0 dBm± 2.00 dB
	*-113.0 dBm	_____	-113.0 dBm± 3.00 dB
	*-120.0 dBm	_____	-120.0 dBm± 3.00 dB

4.7.4 Fine Level Resolution Test

Fine level resolution is verified ensuring that a small change in level setting results in a small change in RF output level.

SPECIFICATION: For proper operation, level will adjust by tenths (0.1) of dB.

___ 4.7.4.1 Connect the NAV 2000R RF OUTPUT to the Measuring Receiver and select COM Mode 100.0 MHz at -10 dBm. Measure and record the RF level.

_____dBm LIMIT: -10 ± 1.0 dBm

___ 4.7.4.2 Select an RF level of -9.9 dBm. Measure and record the RF level.

_____dBm LIMIT: +0.1 ± 0.1dB above reading of step 4.7.4.1 measurement.

4.7.5 RF Level Frequency Response

The NAV 2000R Signal Generator frequency response is verified to be within specification by first measuring the un-modulated carrier level at a reference frequency of 125 MHz. Then, the variation of level at several frequencies over the RF band of 150 kHz to 450 MHz is verified against the test specification.

RANGE: 150 kHz to 450 MHz at -10 dBm

SPECIFICATION:

Reference Reading	-10 dBm ± 1.0 dB @ 125.000 MHz
Freq Resp.	Reference Reading ± 0.5 dB

___ 4.7.5.1 Set the NAV 2000R to COM MODE, -10.0 dBm RF output level at 125.0 MHz with TONE 1 and TONE 2 set to 0% MOD.

___ 4.7.5.2 Connect the NAV 2000R RF OUTPUT to the Measuring Receiver.

___ 4.7.5.3 For each Table 6 RF Frequency, record power level measurement by setting the NAV 2000R Carrier and the Measuring Receiver frequency. Take the measurement by entering measurement frequency on Measuring Receiver. Then, after measured frequency is displayed, select "RF POWER" measurement.

TABLE 6 - NAV 2000R UN-MODULATED FREQUENCY RESPONSE

	RF FREQ SETTING (MHZ)	OUTPUT LEVEL (dBm)	LIMIT
Reference Reading--->	125.000	_____	-10 dBm ± 1.0 dB
	0.150	_____	Ref. Reading ± 0.5 dB
	0.200	_____	Ref. Reading ± 0.5 dB
	0.400	_____	Ref. Reading ± 0.5 dB
	0.700	_____	Ref. Reading ± 0.5 dB
	1.000	_____	Ref. Reading ± 0.5 dB
	2.000	_____	Ref. Reading ± 0.5 dB
	4.000	_____	Ref. Reading ± 0.5 dB
	7.000	_____	Ref. Reading ± 0.5 dB
	10.000	_____	Ref. Reading ± 0.5 dB
	25.000	_____	Ref. Reading ± 0.5 dB
	75.000	_____	Ref. Reading ± 0.5 dB
	100.000	_____	Ref. Reading ± 0.5 dB
	200.000	_____	Ref. Reading ± 0.5 dB
	250.000	_____	Ref. Reading ± 0.5 dB
	350.000	_____	Ref. Reading ± 0.5 dB
	400.000	_____	Ref. Reading ± 0.5 dB
	450.000	_____	Ref. Reading ± 0.5 dB

*4.7.6 RF Output VSWR

The RF output VSWR specification is verified by measuring mismatch returns using a Network Analyzer. The carrier frequency of the NAV 2000R is moved to its lowest frequency (150 kHz) to prevent VSWR measurement errors over the tested range of 300 kHz to 450 MHz. The calibrated Network Analyzer sweeps a reference applied to the RF output and measures the returns for VSWR determination. A Transmission & Reflection Test Set is used to isolate and measure the applied and reflected signals.

RANGE:	300 kHz to 450 MHz 0 dBm to -127 dBm output levels
SPECIFICATION:	<1.5

___ 4.7.6.1 Set the NAV 2000R to COM Mode at 0.150 MHz and -127 dBm with TONE 1 and TONE2 on 0% MOD.

___ 4.7.6.2 Connect the Network Analyzer, calibrated for S11 from 300 kHz to 450 MHz, to the NAV 2000R RF OUTPUT.

___ 4.7.6.3 Measure the VSWR sweeping from 300 kHz to 450 MHz. Record worst case VSWR and frequency.

_____ VSWR @ _____ MHz

LIMIT: VSWR < 1.5 at all frequencies

___ 4.7.6.4 Select an output level of 0.0 dBm.

___ 4.7.6.5 Connect the Network Analyzer to the RF OUTPUT of the NAV 2000R.

___ 4.7.6.6 Measure and record the worst case VSWR and frequency over 300 KHz to 450 MHz.

_____ VSWR @_____ MHz

LIMIT: VSWR < 1.5 at all frequencies

4.8 SPECTRAL PURITY

The spectral purity of the NAV 2000R signal generator is verified by examining the harmonic content, spurious (non-harmonics), phase noise, residual AM, and residual FM of the generated carrier.

4.8.1 RF Harmonic Suppression

Verification of harmonic suppression is accomplished by observing the spectrum of the RF output signal using a spectrum analyzer. The power in the second and third harmonics is measured relative to the carrier and compared against the specification. While taking measurements, ensure all other harmonics (>3rd) are < -30 dBc.

RANGE: 0.200 MHz to 400 MHz

SPECIFICATION: All Harmonics < -30 dBc

___ 4.8.1.1 Connect the NAV 2000R RF OUTPUT to the spectrum analyzer.

___ 4.8.1.2 Set the NAV 2000R to COM mode at 0.200 MHz, -10.0 dBm level, 0% MOD for TONE 1 and TONE 2.

___ 4.8.1.3 Complete TABLE 7 by adjusting the RF carrier output frequency appropriately and recording the harmonic levels as indicated by the spectrum analyzer.

TABLE 7 - NAV 2000R HARMONIC SUPPRESSION TEST

RF FREQ SETTING (MHZ)	OUTPUT LEVEL (dBm)	2ND HARM (dBc)	LIMIT	3RD HARM (dBc)	LIMIT
0.200	_____	_____	< -30 dBc	_____	< -30 dBc
0.400	_____	_____	< -30 dBc	_____	< -30 dBc
0.700	_____	_____	< -30 dBc	_____	< -30 dBc
1.000	_____	_____	< -30 dBc	_____	< -30 dBc
2.000	_____	_____	< -30 dBc	_____	< -30 dBc
4.000	_____	_____	< -30 dBc	_____	< -30 dBc
7.000	_____	_____	< -30 dBc	_____	< -30 dBc
10.000	_____	_____	< -30 dBc	_____	< -30 dBc
25.000	_____	_____	< -30 dBc	_____	< -30 dBc
75.000	_____	_____	< -30 dBc	_____	< -30 dBc
100.000	_____	_____	< -30 dBc	_____	< -30 dBc
125.000	_____	_____	< -30 dBc	_____	< -30 dBc
200.000	_____	_____	< -30 dBc	_____	< -30 dBc
250.000	_____	_____	< -30 dBc	_____	< -30 dBc
350.000	_____	_____	< -30 dBc	_____	< -30 dBc
400.000	_____	_____	< -30 dBc	_____	< -30 dBc

4.8.2 Non-Harmonic Levels

The power content of non-harmonic energy is measured near the carrier frequency. This ensures that significant spurious signals or noise are not present in the RF spectrum.

RANGE: 150 kHz to 450 MHz Carrier

SPECIFICATION: < -60 dBc @ > 5 kHz from Carrier

___ 4.8.2.1 Connect the NAV 2000R RF OUTPUT to the Spectrum Analyzer Input. Set the NAV 2000R to COM mode at 150 kHz, 0.0 dBm with TONE 1 & TONE 2 on 0.0% MOD.

___ 4.8.2.2 For the 50 kHz,100 kHz and 300 kHz Spectrum Analyzer Spans, complete TABLE 8 adjusting appropriately the NAV 2000R RF carrier frequency and Spectrum Analyzer Center Frequency, Resolution Bandwidth (RBW), and Video Bandwidth (VBW).

TABLE 8 - NON-HARMONIC LEVEL TEST

LIMIT: Non-Harmonics < -60 dBc at > 5 kHz from carrier

NAV 2000R ** SPEC ANLZR **				WITHIN	**SPEC ANLZR **			WITHIN
RF CARRIE	SPAN	RBW	VBW	SPEC	SPAN	RBW	VBW	SPEC
FREQ(MHz	(kHz)	(Hz)	(Hz)	SPAN 1?	(kHz)	(kHz)	(kHz)	SPAN ?
0.150	50	300	300	(Y/N)	100	3.0	3.0	(Y/N)
0.200	50	300	300	(Y/N)	100	3.0	3.0	(Y/N)
0.400	50	300	300	(Y/N)	300	3.0	3.0	(Y/N)
0.700	50	300	300	(Y/N)	300	3.0	3.0	(Y/N)
1.000	50	300	300	(Y/N)	300	3.0	3.0	(Y/N)
2.000	50	300	300	(Y/N)	300	3.0	3.0	(Y/N)
4.000	50	300	300	(Y/N)	300	3.0	3.0	(Y/N)
7.000	50	300	300	(Y/N)	300	3.0	3.0	(Y/N)
10.000	50	300	300	(Y/N)	300	3.0	3.0	Y/N)
25.000	50	300	300	(Y/N)	300	3.0	3.0	(Y/N)
75.000	50	300	300	(Y/N)	300	3.0	3.0	(Y/N)
100.000	50	300	300	(Y/N)	300	3.0	3.0	(Y/N)
125.000	50	300	300	(Y/N)	300	3.0	3.0	(Y/N)
200.000	50	300	300	(Y/N)	300	3.0	3.0	(Y/N)
250.000	50	300	300	(Y/N)	300	3.0	3.0	(Y/N)
350.000	50	300	300	(Y/N)	300	3.0	3.0	(Y/N)
400.000	50	300	300	(Y/N)	300	3.0	3.0	(Y/N)
450.000	50	300	300	(Y/N)	300	3.0	3.0	(Y/N)

*4.8.3 Phase Noise Test

Phase Noise measurements ensure that the RF signal generated by the NAV 2000R meets specification.

SPECIFICATION & RANGE:

150.000 kHz to 56.25 MHz Carrier:
< - 87 dBc with 10 Hz BW at> ± 15 kHz
56.250 MHz to 112.500 MHz Carrier:
< -87 dBc with 10 Hz BW at > ± 10 kHz
112.500 MHz to 225.000 MHz Carrier:
< -87 dBc with 10 Hz BW at > ± 10 kHz
225.000 MHz to 450.000 MHz Carrier:
< -87 dBc with 10 Hz BW at > ± 10 kHz

___ 4.8.3.1 Connect the NAV 2000R RF output to the Spectrum analyzer.

___ 4.8.3.2 Set the NAV 2000R to COM Mode with 15.0 MHz carrier at 0.0 dBm with TONE 1 and TONE 2 on 0.0% MOD.

___ 4.8.3.3 Complete Table 9 by setting the NAV 2000R carrier frequency and Spectrum Analyzer Center frequency, Span, Resolution BW, and Video BW as listed and record whether or not the phase noise is within limits specified.

TABLE 9 - PHASE NOISE TEST

NAV 2000R CARRIER FREQ(MHz)	*SPECTRUM ANALYZER* SPAN (kHz)	RBW (Hz)	VIDEO BW(Hz)	LIMIT	WITHIN LIMIT?
15.000	50	10	1	< -87 dBc @ ± 15 kHz from carrier	(Y/N)
75.000	25	10	1	< -87 dBc @ ± 10 kHz from carrier	(Y/N)
125.000	25	10	1	< -87 dBc @ ± 10 kHz from carrier	(Y/N)
330.000	25	10	1	< -87 dBc @ ± 10 kHz from carrier	(Y/N)

4.8.4 Residual AM

The effect of NAV 2000R AM noise is quantified by measuring residual AM existing on an unmodulated carrier with an averaging AM detector of a measuring receiver. Amplitude Modulating with a tone of -60 dBc theoretically produces 0.1 % AM. Thus, a residual AM of < 0.1% means that AM noise is < -60 dBc. Residual AM is measured at each of the four internal bands of the NAV 2000R.

RANGE: Each of Four Internal Bands

SPECIFICATION:

< 0.1% (150.000 kHz to 56.250 MHz band)
< 0.1% (56.250 MHz to 112.500 MHz band)
< 0.1% (112.500 MHz to 225.000 MHz band)
< 0.1% (225.000 MHz to 450.000 MHz band)

___ 4.8.4.1 Connect the NAV 2000R RF OUTPUT to the Measuring Receiver.

___ 4.8.4.2 Set the NAV 2000R to the COM mode, 0.0 dBm output at 15.0 MHz with TONE 1 and TONE 2 at 0 % MOD.

___ 4.8.4.3 Set the Measuring Receiver frequency to measure AM at 15.0 MHz with AM detector on AVG and audio filters on 50 Hz HPF and 15 kHz LPF.

___ 4.8.4.4 Complete % AM column of Table 10 by recording Measuring Receiver indication and adjusting NAV 2000R RF carrier frequency and Measuring Receiver measurement frequency appropriately.

TABLE 10 - RESIDUAL AM

CARRIER FREQ(MHZ)	RESIDUAL % AM	RESIDUAL % AM LIMIT
15.000	_____	< 0.1 %
100.000	_____	< 0.1 %
150.000	_____	< 0.1 %
330.000	_____	< 0.1 %

4.8.5 Residual FM

Residual FM is measured and compared to specifications for each of the four internal bands of operation using a measuring receiver with an FM averaging detector and no modulation applied to the test signal.

RANGE: Each of Four Internal Bands

SPECIFICATION:

< 25 Hz (150.000 kHz to 56.250 MHz band)
< 10 Hz (56.250 MHz to 112.500 MHz band)
< 16 Hz (112.500 MHz to 225.000 MHz band)
< 25 Hz (225.000 MHz to 450.000 MHz band

___ 4.8.5.1 Connect the NAV 2000R RF OUTPUT to the Measuring Receiver.

___ 4.8.5.2 Set the NAV 2000R to the COM mode, 0.0 dBm output at 15.0 MHz with TONE 1 and TONE 2 at 0 % MOD.

___ 4.8.5.3 Set the Measuring Receiver frequency to measure FM at 15.0 MHz with FM detector on AVG and audio filters on 50 Hz HPF and 15 kHz LPF.

___ 4.8.5.4 Complete Table 11 by adjusting the NAV 2000R Carrier frequency and measuring receiver tuned frequency (either by using TUNED RF LEVEL or entering frequency via keypad).

TABLE 11 - RESIDUAL FM

CARRIER FREQ(MHZ)	RESIDUAL FM (Hz)	LIMIT
15.000	_____	< 25 Hz
100.000	_____	< 10 Hz
150.000	_____	< 16 Hz
330.000	_____	< 25 Hz

4.9 AM TESTS WITH INTERNAL MODULATING SIGNAL

AM percent modulation accuracy, RF modulation frequency response, % distortion, and audio modulation frequency responses are tested in the following sections.

4.9.1 % AM Accuracy & % Distortion vs. Carrier Frequency

NOTE:

The uncertainty/accuracy ratio using the HP 8902A Measuring Receiver for the percent modulation tests in this paragraph is less than 4:1.

This test ensures that % AM, as shown on the display of the NAV 2000R, is a reading which falls within the published specifications.

RANGE:	0% to 99%
RF CARRIER RANGE 1:	250 kHz to 250 Mhz (10% to 95% at 1 kHz)
RF CARRIER RANGE 2:	250 MHz to 350 Mhz (10% to 80% at 1 kHz)
RESOLUTION:	.01% Setting Increments
SPECIFICATION:	
% AM	± 2.0 % of Setting
% Distortion	2% Maximum at 1 kHz

___ 4.9.1.1 Set the NAV 2000R to the COM mode, frequency to 0.250 MHz, at a -10.0 dBm level with TONE 1 at 1 kHz, 10% MOD and TONE 2 at 1 kHz, 0% MOD. Connect the NAV 2000R RF OUTPUT to the Measuring Receiver.

___ 4.9.1.2 Setup the Measuring Receiver to measure AM PEAK ±/2 modulation with audio filters on 50 Hz HPF and 15 kHz LPF.

___ 4.9.1.3 Complete Table 12, recording measured % AM and % Distortion for 10%, 25%, 50%, 75%, and 95% at various frequencies, by adjusting the NAV 2000R COM TONE 1 MOD % setting and COM mode carrier frequency appropriately.

TABLE 12 - % MOD & % DISTORTION VS. RF CARRIER FREQUENCY FOR A 1kHz AM TONE AT 10%, 25%, 50%, 75%, AND 95%

%MOD SETTING	RF FREQ (MHz)	% MOD	**% MOD LIMITS** LOWER	UPPER	% DIST	% DIST LIMIT
10 %	0.250	____	9.80	10.20	____	< 2.0
	2.500	____	9.80	10.20	____	< 2.0
	25.000	____	9.80	10.20	____	< 2.0
	75.000	____	9.80	10.20	____	< 2.0
	100.000	____	9.80	10.20	____	< 2.0
	125.000	____	9.80	10.20	____	< 2.0
	200.000	____	9.80	10.20	____	< 2.0
	250.000	____	9.80	10.20	____	< 2.0
	350.000	____	9.80	10.20	____	< 2.0
25 %	0.250	____	24.50	25.50	____	< 2.0
	2.500	____	24.50	25.50	____	< 2.0
	25.000	____	24.50	25.50	____	< 2.0
	75.000	____	24.50	25.50	____	< 2.0
	100.000	____	24.50	25.50	____	< 2.0
	125.000	____	24.50	25.50	____	< 2.0
	200.000	____	24.50	25.50	____	< 2.0
	250.000	____	24.50	25.50	____	< 2.0
	350.000	____	24.50	25.50	____	< 2.0
50 %	0.250	____	49.00	51.00	____	< 2.0
	2.500	____	49.00	51.00	____	< 2.0
	25.000	____	49.00	51.00	____	< 2.0
	75.000	____	49.00	51.00	____	< 2.0
	100.000	____	49.00	51.00	____	< 2.0
	125.000	____	49.00	51.00	____	< 2.0
	200.000	____	49.00	51.00	____	< 2.0
	250.000	____	49.00	51.00	____	< 2.0
	350.000	____	49.00	51.00	____	< 2.0
75 %	0.250	____	73.50	76.50	____	< 2.0
	2.500	____	73.50	76.50	____	< 2.0
	25.000	____	73.50	76.50	____	< 2.0
	75.000	____	73.50	76.50	____	< 2.0
	100.000	____	73.50	76.50	____	< 2.0
	125.000	____	73.50	76.50	____	< 2.0
	200.000	____	73.50	76.50	____	< 2.0
	250.000	____	73.50	76.50	____	< 2.0
	350.000	____	73.50	76.50	____	< 2.0
95 %	0.250	____	93.20	96.90	____	< 2.0
	2.500	____	93.20	96.90	____	< 2.0
	25.000	____	93.20	96.90	____	< 2.0
	75.000	____	93.20	96.90	____	< 2.0
	100.000	____	93.20	96.90	____	< 2.0
	125.000	____	93.20	96.90	____	< 2.0
	200.000	____	93.20	96.90	____	< 2.0
	250.000	____	93.20	96.90	____	< 2.0

4.9.2 % AM Audio Frequency Response

The following ensures % AM varies within specification with changing audio modulating frequency.

SPECIFICATION:

(50% AM Setting at 125 MHz Carrier at -10.0 dBm)

< ± 2% of % AM Setting, 30.0 Hz to 15.0 kHz
48.5% < % AM < 50.5% @ 15.0 kHz
46.0% < % AM < 50.0% @ 18.0 kHz

___ 4.9.2.1 Connect the NAV 2000R RF OUTPUT to the Measuring Receiver input and set up the Measuring Receiver to measure 1 kHz % AM at 125.0 MHz with audio filters set for < 20 Hz HPF and > 200 kHz LPF and PEAK ±/2 % AM Measurement.

___ 4.9.2.2 Use the NAV 2000R to generate modulated RF at 125 MHz at -10.0 dBm by setting it to COM mode , TONE 1 MOD % to 50% at 30 Hz, TONE 2 MOD % to 0 % at 1 kHz.

___ 4.9.2.3 Complete Table 13, recording % MOD and adjusting the TONE 1 modulation frequency appropriately.

TABLE 13 - % AM AUDIO FREQUENCY RESPONSE

TONE 1 AUDIO FREQUENCY	% MOD	******** LIMITS ******* LOWER	UPPER
30.0 Hz	_____	49.0%	51.0%
150.0 Hz	_____	49.0%	51.0%
1.0000 kHz	_____	49.0%	51.0%
10.0000 kHz	_____	49.0%	51.0%
12.0000 kHz	_____	49.0%	51.0%
15.0000 kHz	_____	48.5%	50.5%
18.0000 kHz	_____	46.0%	50.0%

4.9.3 External AM Tests

NOTE:

The uncertainty/accuracy ratio using the HP 8902A Measuring Receiver for the percent modulation tests in this paragraph is less than 4:1.

The following verifies external % AM flatness vs. audio frequency when using the EXTERNAL MOD INPUT of the NAV 2000R.

SPECIFICATION:

(50% AM Setting at 125 MHz carrier at -10.0 dBm)

< ± 3.0% of % AM Setting, 30.0 Hz to 15.0 kHz
47.5% < % AM < 50.5% @ 20.0 kHz

___ 4.9.3.1 Connect the NAV 2000R RF OUTPUT to the Measuring Receiver and set up the Measuring Receiver to measure 1 kHz % AM at 125.0 MHz with audio filters set for < 20 Hz HPF and > 200 kHz LPF and PEAK ±/2 % AM Measurement.

___ 4.9.3.2 Apply a 30 Hz tone of 0.707 Vrms to NAV 2000R EXTERNAL MOD INPUT on the rear of the unit.

___ 4.9.3.3 Set the NAV 2000R EXTERNAL MOD mode, via the UTILITY MENU, by pressing and holding "ADF" key and selecting "SELECT EXT. MODULATION MODE" option 2.

___ 4.9.3.4 Set the NAV 2000R to 125.000 MHz, -10.0 dBm at 50.0% MOD.

___ 4.9.3.5 Verify the AUDIO LEVEL is the proper level as indicated on the NAV 2000R display.

"AUDIO LEVEL IS: O.K." message displayed (Y/N)

___ 4.9.3.6 Complete Table 14, recording % MOD while adjusting audio frequency and maintaining a 0.707 Vrms audio level.

___ 4.9.3.7 Disconnect the External Modulation from the EXTERNAL MOD INPUT on the rear of the NAV 2000R and return it to the COM mode by pressing the "COM" key.

TABLE 14 - EXTERNAL AUDIO FREQUENCY RESPONSE

AUDIO FREQUENCY	% MOD	******** LIMITS ******** LOWER	UPPER
30.0 Hz	_____	48.5%	51.5%
150.0 Hz	_____	48.5%	51.5%
1.0000 kHz	_____	48.5%	51.5%
10.0000 kHz	_____	48.5%	51.5%
12.0000 kHz	_____	48.5%	51.5%
*15.0000 kHz	_____	48.5%	51.5%
*20.0000 kHz	_____	47.5%	50.5%

4.10 VOR BEARING ACCURACY TEST

NOTE:

The uncertainty/accuracy ratio using the specified VOR Bearing Calibrator for the VOR Bearing Accuracy Test in this paragraph is less than 4:1.

The following verifies the accuracy of the NAV 2000R VOR bearing using a bearing calibrator.

RANGE: 0 deg to 359.99 deg

SPECIFICATION:
Audio: < ± 0.01 deg from setting. Relative to calibration standard used during calibration.

RF: < ± 0.05 deg from setting. Relative to calibration standard used during calibration.

___ 4.10.1 Connect the VOR Bearing calibrator to the AUDIO OUT on the rear of the NAV 2000R.

___ 4.10.2 Select the VOR Mode on the NAV 2000R and set transmit normal VOR signal at 108.00000 MHz with IDENT OFF. (An abnormal VOR setting is indicated by asterisks at either side of VOR bearing field). Normal VOR settings are as follows:

TOTAL % MOD Field: 60%
30 HZ Fields: 30.0 Hz at 30.00%
9960 Hz Fields: 9960.0 Hz at 30.00%

___ 4.10.3 Complete Table 15, recording measured bearings while adjusting the NAV 2000R bearing appropriately.

___ 4.10.4 Disconnect the VOR Bearing Calibrator.

___ 4.10.5 Connect the RF detector to the NAV 2000R RF OUTPUT connector.

___ 4.10.6 Connect the VOR Bearing calibrator to the RF detector output.

___ 4.10.7 Repeat step 4.10.2. Set the NAV 2000R RF level to 0.0 dBm. Set the NAV 2000R bearing to 0.00 deg.

___ 4.10.8 Verify the VOR Bearing calibrator measured bearing is 0.00 +/- 0.05 deg.

TABLE 15 - VOR BEARING ACCURACY

SELECTED BEARING	BEARING	******* LIMITS ******* LOWER	UPPER
0 deg FROM	_____ deg	359.99 deg	0.01 deg
90 deg FROM	_____ deg	89.99 deg	90.01 deg
180 deg FROM	_____ deg	179.99 deg	180.01 deg
270 deg FROM	_____ deg	269.99 deg	270.01 deg

4.11 AUDIO DDM TEST

Audio DDM is tested by measuring the internally generated LOC(alizer) AUDIO OUTPUT modulating signal levels and ensuring that theoretical % MOD which they would cause if used as RF carrier modulating signals is within specifications.

SPECIFICATION: ***** LOC(alizer) *********
0.000 ± 0.0003 DDM
0.046 ± 0.0012 DDM
0.093 ± 0.0021 DDM
0.155 ± 0.0034 DDM
0.200 ± 0.0053 DDM

___ 4.11.1 Connect the NAV 2000R AUDIO OUTPUT (on rear panel) to a multimeter. Set the multimeter to measure Vrms to 5 digits.

___ 4.11.2 Set the NAV 2000R to LOCa (composite audio mode) by selecting AUDIO CONTROL MODE field found on LOC +page 1. Set the audio level to 1.0 Vrms.

___ 4.11.3 Complete Table 16, recording 90 Hz and 150 Hz audio Vrms measurements for LOC RIGHT. This is accomplished for the listed DDMs by first setting the NAV 2000R LOC 90 Hz and 150 Hz audio tones according to Table 16. For a given DDM, record 90 Hz Vrms with 150 Hz OFF (0.0% MOD) and 150 Hz Vrms with 90 Hz OFF (0.0% MOD). Use the following procedure:

A. Press the appropriate DDM "hot key"
B. Turn the 150 Hz OFF by toggling the 150 Hz key or the 150 Hz field
C. Record the 90 Hz Vrms measurement
D. Turn the 150 Hz ON by toggling the 150 Hz key or the 150 Hz field
E. Turn the 90 Hz OFF by toggling the 90 Hz key or the 90 Hz field
F. Record the 150 Hz Vrms measurement
G. Turn the 90 Hz ON by pressing the 90 Hz key or the 90 Hz field
H. Repeat steps A through G for all LOC DDM keys

TABLE 16 - LOC RIGHT AUDIO DDM ACCURACY DETERMINATION DATA

***** LOC RIGHT MEASURED VOLTAGES *****

DDM	90 Hz Vrms	150 Hz Vrms
0.000	_____	_____
0.046	_____	_____
0.093	_____	_____
0.155	_____	_____
0.200	_____	_____

___ 4.11.4 Transfer 90 Hz Vrms and 150 Hz Vrms data from respective columns of Table 16 to appropriate columns of Table 17.

___ 4.11.5 Complete Table 17, filling in CALC'D DDM column by calculating the DDM using the following equation:

DDM = ((2*M* ((90 Hz Vrms/150 Hz Vrms) -1))/((90 Hz Vrms/150 Hz Vrms) +1)) * .01

Where M=20 for LOC

TABLE 17 - CALCULATED AUDIO DDM ACCURACY

DDM	MEAS. 90 HZ Vrms	MEAS. 150 HZ Vrms	CALC'D DDM	DDM LIMIT
LOC:				
0.000	_____	_____	_____	0.000 ± 0.0003
0.046	_____	_____	_____	0.046 ± 0.0012
0.093	_____	_____	_____	0.093 ± 0.0021
0.155	_____	_____	_____	0.155 ± 0.0034
0.200	_____	_____	_____	0.200 ± 0.0053

AUDIO DDM ACCURACY EXAMPLE

Suppose LOC RIGHT 0.200 DDM measured audio RMS voltages are:

90 Hz Vrms: 1.06007
150 Hz Vrms: 0.35360

Substituting the values into the equation:

DDM = ((2*20*((1.06007/0.35360)-1))/((1.06007/0.35360)+1))*.01

DDM = ((40*(2.99794-1))/(2.99794+1))*.01

DDM = ((40*1.99794)/3.99794)*.01

DDM = 0.199897

4.12 RF DDM TEST

The preset NAV 2000R DDM deviations are evaluated indirectly. By measuring the detected voltages of the 90 Hz and 150 Hz tones which comprise LOC and G/S signals, DDM accuracy conformance can be determined via calculation.

SPECIFICATION:

***** LOC(alizer) *****	***** G/S (Glideslope) *****
0.000 ± 0.0003 DDM	0.000 ± 0.0003 DDM
0.046 ± 0.0012 DDM	0.045 ± 0.0012 DDM
0.093 ± 0.0021 DDM	0.091 ± 0.0021 DDM
0.155 ± 0.0034 DDM	0.175 ± 0.0038 DDM
0.200 ± 0.0053 DDM	0.400 ± 0.0083 DDM

___ 4.12.1 Connect the RF detector to the NAV 2000R RF OUTPUT connector.

___ 4.12.2 Connect the DMM to the RF detector output. Set the DMM to the AC volts synchronously sub-sampled mode.

___ 4.12.3 Select the NAV 2000R LOC mode, and set RF parameters to LOC RIGHT at 108.10000 MHz and 0.0 dBm RF output level (ensure IDENT OFF, 0.0% 1020 Hz MOD, and 0.0 deg PHASE SHIFT).

___ 4.12.4 Complete Table 18, recording the 90 Hz and 150 Hz Vrms measurements for LOC RIGHT. This is accomplished for the listed DDMs by first setting the NAV 2000R LOC 90 Hz and 150 Hz tones accordingly. For a given DDM, record 90 Hz Vrms with 150 Hz OFF (0.0 %) and 150 Hz Vrms with 90 Hz OFF (0.0%). Use the following procedure:

A. Press the appropriate DDM "hot key"
B. Turn the 150 Hz OFF by pressing the 150 Hz key
C. Record the 90 Hz Vrms measurement
D. Turn the 150 Hz ON by pressing the 150 Hz key
E. Turn the 90 Hz OFF by pressing the 90 Hz key
F. Record the 150 Hz Vrms measurement
G. Turn the 90 Hz ON by pressing the 90 Hz key
H. Repeat steps A through G for all LOC DDM keys

TABLE 18 - LOC RIGHT RF DDM ACCURACY DETERMINATION DATA

	**** LOC RIGHT 90 Hz ****			**** LOC RIGHT 150 Hz ****		
DDM	% MOD 90 Hz SETTING	% MOD 150 Hz SETTING	MEAS 90 Hz Vrms	% MOD 90 Hz SETTING	% MOD 150 Hz SETTING	MEAS 150 Hz Vrms
0.000	20.00	0.0	____	0.0	20.00	____
0.046	22.30	0.0	____	0.0	17.70	____
0.093	24.65	0.0	____	0.0	15.35	____
0.155	27.75	0.0	____	0.0	12.25	____
0.200	30.00	0.0	____	0.0	10.00	____

___ 4.12.5 Select the G/S mode on the NAV 2000R and set the RF parameters to G/S DOWN at 329.150 MHz and 0.0 dBm RF Level (ensure 0.0 deg PHASE SHIFT).

___ 4.12.6 Complete Table 19, recording the 90 Hz and 150 Hz Vrms measurements for G/S DOWN. This is accomplished for the listed DDMs by first setting the NAV 2000R G/S 90 Hz and 150 Hz tones accordingly. For a given DDM, record 90 Hz Vrms with 150 Hz OFF (0.0 %) and 150 Hz Vrms with 90 Hz OFF (0.0%). Use the following procedure:

A. Press the appropriate DDM "hot key"
B. Turn the 150 Hz OFF by pressing the 150 Hz key
C. Record the 90 Hz Vrms measurement
D. Turn the 150 Hz ON by pressing the 150 Hz key
E. Turn the 90 Hz OFF by pressing the 90 Hz key
F. Record the 150 Hz Vrms measurement
G. Turn the 90 Hz ON by pressing the 90 Hz key
H. Repeat steps A through G for all G/S DDM keys

TABLE 19 - G/S DOWN RF DDM ACCURACY DETERMINATION DATA

***** G/S DOWN 90 Hz *****				***** G/S DOWN 150 Hz *****		
% MOD 90 Hz DDM	% MOD 150 Hz SETTING	MEAS 90 Hz SETTING	% MOD 90 Hz Vrms	% MOD 150 Hz SETTING	MEAS 150 Hz SETTING	Vrms
0.000	40.00	0.0	____	0.0	40.00	____
0.045	42.25	0.0	____	0.0	37.75	____
0.091	44.55	0.0	____	0.0	35.45	____
0.175	48.75	0.0	____	0.0	31.25	____
0.400	60.00	0.0	____	0.0	20.00	____

___ 4.12.7 Complete Table 20, by using the appropriate Vrms data of Tables 18 & 19. The DDM is calculated using the following formula.

DDM = ((2*M*((90HzVrms/150HzVrms)-1))/((90HzVrms/150HzVrms)+1))*.01

Where M = 20 for LOC or
M = 40 for G/S

TABLE 20 - CALCULATED RF DDM ACCURACY

********** FROM TABLES 18 & 19 **********

90 Hz % MOD SETTING	MEAS'D 90 Hz Vrms	150 Hz % MOD SETTING	MEAS'D 150 Hz Vrms	CALC'D DDM	DDM LIMIT
LOC:					
20.00	_____	20.00	_____	_____	0.000 ± 0.0003
22.30	_____	17.70	_____	_____	0.046 ± 0.0012
24.65	_____	15.35	_____	_____	0.093 ± 0.0021
27.75	_____	12.25	_____	_____	0.155 ± 0.0034
30.00	_____	10.00	_____	_____	0.200 ± 0.0053
G/S:					
40.00	_____	40.00	_____	_____	0.000 ± 0.0003
42.25	_____	37.75	_____	_____	0.045 ± 0.0012
44.55	_____	35.45	_____	_____	0.091 ± 0.0021
48.75	_____	31.25	_____	_____	0.175 ± 0.0038
60.00	_____	20.00	_____	_____	0.400 ± 0.0083

4.13 SELCAL TEST

Proper SELCAL operation is verified by examining the NAV 2000R internally generated AUDIO OUTPUT signal using an oscilloscope.

SPECIFICATION:

Pulse #1 Time: 0.8 ± 0.1 sec
Pulse #2 Time: 0.8 ± 0.1 sec
Gap Time: 200 ± 100 msec
Pulse Amplitude: 4.0 ± 0.5 Vpp

____ 4.13.1 Connect the NAV 2000R AUDIO OUTPUT on the rear panel to CH1 of the Oscilloscope.

____ 4.13.2 Set the NAV 2000R to SELCAL Mode by selecting the SELCAL field found on the COM mode page. On Page 3 of SELCAL mode, set PULSE #1 TIME to 0.8 sec, gap time (pulse spacing) to 200 ms, and PULSE #2 TIME to 0.8 secs. Return to Page 1 of SELCAL mode.

____ 4.13.3 Set the Oscilloscope for a 0.2 secs/div timebase, 1.0 V/div on CH1 and NORMAL DC coupled positive edge internal triggering for CH1.

____ 4.13.4 Verify that Pulse #1 Time (Duration), Pulse #2 Time (Duration), Gap Time (inter-pulse spacing), and Pulse Amplitude are within test specifications by toggling SELCAL RF KEY field from OFF to ON. Note that the persistence of the oscilloscope will not hold for such slow sweeps needed to observe SELCAL audio signals.

Toggle RF KEY from OFF to ON as needed to for verification.

Pulse #1 Time LIMIT: 0.8 ± 0.1 secs Within LIMIT? (Y/N)

Pulse #2 Time LIMIT: 0.8 ± 0.1 secs Within LIMIT? (Y/N)

Gap Time LIMIT: 200 ± 100 mSec Within LIMIT? (Y/N)

Pulse Amplitude LIMIT: 4.0 ± 0.5 Vpp Within LIMIT? (Y/N)

***4.14 INTERRUPT THRESHOLD TEST**

WARNING: This test is for NAV 2000R's part number 01-0520-80 DO NOT perform this test on any other part number units.

Note: The term 'trip' refers to the opening of the relay in reverse power protection module and the displaying of the warning message on the NAV 2000R display.

____ 4.14.1 Connect a 3 db pad to the RF amplifier output.

****

WARNING: Damage to the RF amplifier may result if power is applied with no load at the amplifier output. Be sure the 3 bd pad is connected to the output connector at all times.

****

____ 4.14.2 Connect the signal generator output to the Rf amplifier input.

****

WARNING: Damage to the RF amplifier may result if power in excess of +10 dBm is applied to the amplifier input.

****

____ 4.14.3 Adjust the signal generator output level to obtain an RF level of +15 dBm at the output of the 3 dB attenuator.

____ 4.14.4 Connect the 3dB attenuator output to the NAV 2000R RF OUTPUT connector.

____ 4.14.5 Verify that the reverse power protection circuit does not trip.

____ 4.14.6 Increase the RF power applied to the NAV 2000R OUTPUT by increasing the Signal Generator RF level in 1 dB steps. Verify the reverse power protection circuit trips and record the power level applied to the NAV 2000R.

FREQUENCY (MHz)	PWR LEVEL (dbM)	LIMIT (dBm)
200	_____	+24 +/- 4

5.0 IEC 61010-1, ANNEX K TESTS

This section is for manufacturing only and is for fulfilling the requirements of IEC 61010-1:95 A2, annex K.

_____ A. These tests shall be made with equipment fully assembled.
_____ B. The equipment shall not be energized during the tests, but the mains switch (A1S1) shall be in the on-position.

5.1 Protective earth

Using a milliohmmeter perform the following measurements from the appliance inlet ground pin (A1FL1-GND) to the points specified.

_____ A. GPIB rear panel (A2\2) Limit: < 100 mΩ Measurement: _____ mΩ
_____ B. GPIB connector shell (A2J2-shell) Limit: < 100 mΩ Measurement: _____ mΩ
_____ C. Left side blank (3) Limit: < 100 mΩ Measurement: _____ mΩ
_____ D. AUDIO OUTPUT rear panel (A2\2) Limit: < 100 mΩ Measurement: _____ mΩ
_____ E. EXTERNAL MOD INPUT rear panel (A4\6) Limit: < 100 mΩ Measurement: _____ mΩ
_____ F. Right side blank (4) Limit: < 100 mΩ Measurement: _____ mΩ
_____ G. Synthesizer rear panel (A5\4) Limit: < 100 mΩ Measurement: _____ mΩ
_____ H. Power Jack Panel (A1\38) Limit: < 100 mΩ Measurement: _____ mΩ
_____ I. RF OUTPUT connector shell (A1J1-shell) Limit: < 100 mΩ Measurement: _____ mΩ

5.2 Mains circuits

This is a High Pot test done between the mains terminals, line and neutral, which are connected together on the plus (+) side, and all accessible conductive parts, as specified below, connected together on the minus (-) side.

5.2.1 Setup

_____ A. Make sure the High-Pot Interface is disconnected from the ac power outlet.
_____ B. Using a power cable connect A1FL1 on the NAV 2000R to the Interface Tester.

5.2.2 Test

For each of the following use the appropriate cable, turn on the High-Pot Tester, raise the voltage to 1900 V dc for 2 s and verify there is no breakdown or repeated flashover. Corona effects and similar phenomena are disregarded:

_____ A. To GND (anywhere on card cage rear panel [A1A3\13])
_____ B. GPIB connector (A2J2)
All terminals and shell tied together.
_____ C. AUDIO OUTPUT (A3J5)
Center terminal and shell tied together.
_____ D. EXTERNAL MOD INPUT connector (A4J1)
Center terminal and shell tied together.
_____ E. 10 MHZ OUT connector (A5A1J7)
Center terminal and shell tied together.
_____ F. 10 MHZ IN connector (A5A1J6)
Center terminal and shell tied together.
_____ G. RF OUTPUT connector (A1J1)
Center terminal and shell tied together.

TEST COMPLETE

NAV 2000R CALIBRATION PROCEDURE

1.0 INTRODUCTION

The following procedure should be used for calibration of the NAV 2000R. The NAV 2000R should be completely assembled except for the top cover unless otherwise indicated by this procedure. The NAV 2000R and all test equipment used for calibration should have a minimum 30 minute warm up at room temperature before calibration is performed. The procedure must be followed in the order listed.

2.0 REQUIRED TEST EQUIPMENT

The following table lists recommended test equipment required to calibrate the NAV 2000R. Pertinent specifications of each piece of test equipment are listed to enable a functional equivalent to be substituted. All test equipment must be properly calibrated before calibrating the NAV 2000R.

DESCRIPTION / TYPE	FUNCTION	RANGE	ACCURACY
MULTIMETER (HP 3458A)	AC VOLTMETER	1 Hz to 40 Hz	.007 % of Reading +.004% of Range
		40 Hz to 1 kHz	.007 % of Reading +.002 % of Range
		1 kHz to 20 kHz	.014 % of Reading +.002 % of Range
MEASURING RECEIVER	RF POWER METER 150kHz to 450MHz	-120 to +7 dBm	± 0.25 dB
(HP 8902A with HP11722A POWER SENSOR)	AM MODULATION 20 to 50 Hz	5% to 99%	±3% reading ±1 digit
	50 Hz to 20kHz	5% to 99%	±1% reading±1 digit
	AUDIO FREQUENCY 20 Hz to 20kHz		± 5 ppm
RF FREQUENCY COUNTER (PHILLIPS PM6676)	RF FREQUENCY	100 MHz to 450 MHz	±0.1 ppm
VOR BEARING CALIBRATOR (COLLINS 478A-3) (ZIFOR III)	VOR BEARING	0 TO 360 Degrees	<0.02 Degree

3.0 CALIBRATION PROCEDURE

3.1 AUDIO FREQUENCY CALIBRATION

_____ 3.1.1 Turn off the NAV 2000R. Remove the DSP board from the rear of the NAV 2000R and replace it on an extender card.

_____ 3.1.2 Turn on the NAV 2000R. Connect the AUDIO OUTPUT jack of the DSP board to the audio input of the MEASURING RECEIVER.

_____ 3.1.3 Select the NAV2000R COM MODE. Turn off TONE 2 by setting %MOD to 0%. Enter a TONE 1 frequency of 12450.0. Turn on TONE 1 by setting TONE 1 %MOD to 50%.

_____ 3.1.4 Adjust C67 of the DSP board for an audio frequency reading of 12450.0 $\pm$ 0.1 Hz.

_____ 3.1.5 Turn off the NAV 2000R. Replace the DSP board. Turn the NAV 2000R back on.

3.2 INTERNAL AUDIO LEVEL CALIBRATION

_____ 3.2.1 Go to the NAV 2000R Utility Menu by pressing and holding the ADF button.

_____ 3.2.2 Select the Calibration Menu. Following the steps of this menu will automatically setup the NAV 2000R outputs required for each alignment.

_____ 3.2.3 Go to INTERNAL AUDIO ALIGNMENT. Following the steps listed: Slowly turn R8 "internal audio level" potentiometer counter clockwise until the NAV 2000R display indicates: AUDIO LEVEL IS: TOO LOW.

_____ 3.2.4 Then turn R8 very slowly clockwise until display indicates: AUDIO LEVEL IS : O.K. .

_____ 3.2.5 Turn R8 an additional 3/4 turn clockwise. Display should still indicate: AUDIO LEVEL IS : O.K. .

3.3 RF LEVEL CALIBRATION

_____ 3.3.1 Go to RF LEVEL ALIGNMENT. Set the MEASURING RECEIVER to measure TUNED RF at 125 MHz. Following the steps listed: Adjust R39 "RF LEVEL" for a reading of -10.0 dBm at the RF OUTPUT jack of the NAV 2000R.

_____ 3.3.2 Set the MEASURING RECEIVER to measure TUNED RF at 15 MHz. Following step 3: Adjust R38 "LOW BAND LEVEL" for a reading of -10.0 dBm at the RF OUTPUT jack of the NAV 2000R.

_____3.3.3 Go to RF LEVEL CALIBRATION: This is a frequency versus level flatness calibration. The output level at each frequency should be -10 dBm +/- .1 dBm. Use the cursor keys to step through the frequencies listed. Measuring the output level at each frequency and adjusting if needed. To adjust a frequency, highlight it and then press the SEL key. Asterisks indicate the selected factor. Use the cursor keys to adjust the factor until the correct output is obtained. Press SEL again to de-select the factor and allow moving to the next frequency.

3.4 MODULATION CALIBRATION

_____ 3.4.1 Go to MODULATION ALIGNMENT. Set the MEASURING RECEIVER to measure AM modulation (± peak / 2) of a 125 MHz carrier.

_____ 3.4.2 Set MEASURING RECEIVER audio filters: HIGH PASS - 50 Hz LOW PASS – 15 kHz

_____ 3.4.3 Follow the step listed: Adjust R46 "MOD LEVEL" for a reading of 50.0 % AM.

3.5 DETECTED AUDIO ALIGNMENT

Detected audio level is checked during power on to verify proper modulator operation. The level of this audio is calibrated at the test RF frequency and modulation level used during this self test.

_____ 3.5.1 Go to DETECTED AUDIO ALIGNMENT. Follow the steps: Turn R44 "DETECTED AUDIO LEVEL" counter-clockwise until the NAV 2000R display indicates AUDIO IS: TOO HIGH.

_____ 3.5.2 Now slowly turn R44 clockwise until the display indicates AUDIO IS: O.K.

_____ 3.5.3 Turn R44 an additional two full turns clockwise. Verify that the display still indicates AUDIO IS: O. K.

3.6 EXTERNAL MODULATION INPUT CALIBRATION

_____ 3.6.1 Connect an audio signal generator to the NAV2000R EXT MOD INPUT.

_____ 3.6.2 Apply a .707 volt rms, 1000 Hz sine wave.

_____ 3.6.3 Adjust potentiometer located next to EXT MOD INPUT until the modulation meter reads 50.0%

3.7 BEARING ALIGNMENT

_____ 3.7.1 Go to BEARING ALIGNMENT. Follow the steps listed. Connect the VOR bearing calibrator to the AUDIO OUTPUT of the NAV 2000R. Measure the Bearing Error at zero degree FROM on the calibrator. Enter this error using the NAV 2000R keyboard. The NAV 2000R will automatically correct its output to zero this bearing. After loading the error value, the VOR calibrator should read a bearing error of less than ± 0.01 degree.

3.8 AUDIO OUTPUT LEVEL CALIBRATION

_____ 3.8.1 Go to EXTERNAL AUDIO ALIGNMENT. Follow the steps listed: Connect an AC voltmeter to the AUDIO OUTPUT jack on the rear of the NAV 2000R. Adjust the potentiometer located next to the AUDIO OUTPUT jack for an output level of 1.414 Vrms ± 0.001 Vrms.

3.9 TIME BASE CALIBRATION

_____ 3.9.1 Connect the Frequency Counter to the NAV 2000R RF OUTPUT.

_____ 3.9.2 Remove the cover screw found just inside the TIME BASE - FREQUENCY ADJUSTMENT hole located on the rear of the NAV 2000R.

_____ 3.9.3 Adjust the RF OUTPUT for a frequency of 100.00000 MHz ± 50 Hz.

_____ 3.9.4 Return the frequency adjustment cover screw.

APPENDIX A
GPIB COMMAND QUICK REFERENCE

GENERAL COMMANDS

STATUS
Command: STAT?

SET MODE
Command: MODE=
Values: VOR, VORa, LOC, LOCa, G/S, ADF, MKR, COM, SCL, EMM

WHAT MODE
Command: MODE?
Values: VOR, VORa, LOC, LOCa, G/S, ADF, MKR, COM, SCL, EMM

LOCAL
Command: LOCAL

SET DEFAULTS
Command: DEFAULT

REVERSE POWER PROTECTION RESET
Command: RPP RESET

RF LEVEL
Command: RF LEVEL=
dBm Values: -120 dBm to +7 dBm
uV Values: .224 uV to 987 uV (to nearest .1 dBm)
mV Values: 1.00 mV to 501 mV (to nearest .1 dBm)
Default: -120.0 dBm

RF OUTPUT
Command: RF OUTPUT=
Values: ON, OFF
Default: ON

AUDIO LEVEL
Command: AUDIO LEVEL=
Values: 0 to 1.000 Vrms (0.001 Vrms steps)
Default: 0.500 Vrms

RF FREQUENCY
Command: RF FREQ=
Values: 0.150 MHz to 450.000 MHz (0.00001 MHz steps)

VOR

RF LEVEL
Command: RF LEVEL=
dBm Values: -120 dBm to +7 dBm
uV Values: .224 uV to 987 uV (to nearest .1 dBm)
mV Values: 1.00 mV to 501 mV (to nearest .1 dBm)
Default: -120.0 dBm

BEARING

Command: BEARING=
Values: 0.00 to 359.99 degrees (0.01 degree steps)
Default: 0.00 degrees

TO / FROM REFERENCE

Command: VOR REF=
Values: TO, FROM
Default: FROM

AUDIO CONTROL MODE SELECTION

Command: MODE= VORa
Values: n/a
Default: n/a

30 Hz PERCENT MODULATION

Command: 30HZ %MOD=
Values: 0 to 99% (0.01% steps)
Default: 30.00%

9960 Hz PERCENT MODULATION

Command: 9960HZ %MOD=
Values: 0 to 99% (0.01% steps)
Default: 30.00%

1020 Hz PERCENT MODULATION

Command: 1020HZ %MOD=
Values: 0 to 99% (0.01% steps)
Default: 00.00%

TOTAL PERCENT MODULATION

Command: TOTAL %MOD=
Values: 0 to 99% (0.01% steps)
Default: 60.00%

30 Hz FREQUENCY

Command: 30HZ=
Values: 20.0 to 40.0 Hz (0.1 Hz steps)
Default: 30.0 Hz

9960 Hz FREQUENCY

Command: 9960HZ=
Values: 9000 Hz to 12000 Hz (0.1 Hz steps)
Default: 9960.0 Hz

1020 Hz FREQUENCY

Command: 1020HZ=
Values: 10 Hz to 18000 Hz (0.1 Hz steps)
Default: 1020.0 Hz

IDENTIFICATION MODE

Command: IDENT MODE=
Values: OFF, TONE, CODE
Default: OFF

IDENTIFICATION CODE
Command: IDENT CODE=
Values: 6 characters of A through Z, 0 through 9
Default: JcAir

DOT TIME
Command: DOT TIME=
Values: 50 mS to 250 mS (1 mS steps)
Default: 150 mS

DASH TIME
Command: DASH TIME=
Values: 150 mS to 750 mS (1 mS steps)
Default: 450 mS

DOT / DASH SPACE TIME
Command: DOT DASH SPACE=
Values: 50 mS to 250 mS (1 mS steps)
Default: 150 mS

CHARACTER SPACING TIME
Command: CHAR SPACE=
Values: 150 mS to 750 mS (1 mS steps)
Default: 450 mS

WORD RATE
Command: WORD RATE=
Values: 1.0 to 65.0 seconds (.1 second steps)
Default: 30.0 seconds

VORa

AUDIO LEVEL
Command: AUDIO LEVEL=
Values: 0 to 1.000 Vrms (0.001 Vrms steps)
Default: 0.500 Vrms

BEARING
Command: BEARING=
Values: 0.00 to 359.99 degrees (0.01 degree steps)
Default: 0.00 degrees

TO / FROM REFERENCE
Command: VOR REF=
Values: TO, FROM
Default: FROM

30 Hz PERCENT MODULATION
Command: 30HZ %MOD=
Values: ON, OFF
Default: ON

9960 Hz PERCENT MODULATION
Command: 9960HZ %MOD=
Values: ON, OFF
Default: ON

LOCALIZER

RF LEVEL

Command: RF LEVEL=
dBm Values: -120 dBm to +7 dBm
uV Values: .224 uV to 987 uV (to nearest .1 dBm)
mV Values: 1.00 mV to 501 mV (to nearest .1 dBm)
Default: -120.0 dBm

DDM

Command: DDM=
Values: .000 to .400 (.001 steps)
Default: .000

LEFT / RIGHT

Command: LOC REF=
Values: LEFT, RIGHT
Default: LEFT

AUDIO CONTROL MODE SELECTION

Command: MODE= LOCa
Values: n/a
Default: n/a

90 Hz PERCENT MODULATION

Command: 90HZ %MOD=
Values: 0.00 to 40.0% (0.01% steps)
Default: 20.00%

150 Hz PERCENT MODULATION

Command: 150HZ %MOD=
Values: 0.00 to 40.00% (0.01% steps)
Default: 20.00%

1020 Hz PERCENT MODULATION

Command: 1020HZ %MOD=
Values: 0.00 to 99.00% (0.01% steps)
Default: 30.00%

TOTAL PERCENT MODULATION

Command: TOTAL% MOD=
Values: 0 to 99% (0.01% steps)
Default: 40.00%

90 Hz FREQUENCY

Command: 90HZ=
Values: 80.0 Hz to 100.0 Hz (0.1 Hz steps)
Default: 90.0 Hz

150 Hz FREQUENCY

Command: 150HZ=
Values: 135.0 Hz to 165.0 Hz (0.1 Hz steps)
Default: 150.0 Hz

1020 Hz FREQUENCY
Command: 1020HZ=
Values: 10 Hz to 18000.0 Hz (0.1 Hz steps)
Default: 1020.0 Hz

90 / 150 Hz PHASE SHIFT
Command: PHASE=
Values: 0 to 359.99 degrees (0.01 degrees)
Default: 0

IDENTIFICATION MODE
Command: IDENT MODE=
Values: OFF, TONE, CODE
Default: OFF

IDENTIFICATION CODE
Command: IDENT CODE=
Values: 6 characters of A through Z, 0 through 9
Default: JcAir

DOT TIME
Command: DOT TIME=
Values: 50 mS to 250 mS (1 mS steps)
Default: 150 mS

DASH TIME
Command: DASH TIME=
Values: 150 mS to 750 mS (1 mS steps)
Default: 450 mS

DOT / DASH SPACE TIME
Command: DOT DASH SPACE=
Values: 50 mS to 250 mS (1 mS steps)
Default: 150 mS

CHARACTER SPACING TIME
Command: CHAR SPACE=
Values: 150 mS to 750 mS (1 mS steps)
Default: 450 mS

WORD RATE
Command: WORD RATE=
Values: 1.0 to 65.0 seconds (.1 second steps)
Default: 30.0 seconds

LOCALIZER AUDIO CONTROL (LOCa)

AUDIO LEVEL
Command: AUDIO LEVEL=
Values: 0 to 1.000 Vrms (0.001 Vrms steps)
Default: 0.350 Vrms

DDM
Command: DDM=
Values: .000 to .400 (.001 steps)
Default: .000

LEFT / RIGHT
Command: LOC REF=
Values: LEFT, RIGHT
Default: LEFT

90 Hz PERCENT MODULATION
Command: 90HZ %MOD=
Values: ON, OFF
Default: ON

150 Hz PERCENT MODULATION
Command: 150HZ %MOD=
Values: ON, OFF
Default: ON

GLIDESLOPE

RF LEVEL
Command: RF LEVEL=
dBm Values: -120 dBm to +7 dBm
uV Values: .224 uV to 987 uV (to nearest .1 dBm)
mV Values: 1.00 mV to 501 mV (to nearest .1 dBm)
Default: -120.0 dBm

DDM
Command: DDM=
Values: .000 to .800 (.001 DDM steps)
Default: .000

UP / DOWN
Command: G/S REF=
Values: UP, DOWN
Default: UP

90 Hz PERCENT MODULATION
Command: 90HZ %MOD=
Values: 0.00 to 99.00% (0.01% steps)
Default: 40.00%

150 Hz PERCENT MODULATION
Command: 150HZ %MOD=
Values: 0.00 to 99.00% (0.01% steps)
Default: 40.00%

TOTAL PERCENT MODULATION
Command: TOTAL% MOD=
Values: 0 to 99.00% (0.01% steps)
Default: 80.00%

90 Hz FREQUENCY
Command: 90HZ=
Values: 80.0 Hz to 100.0 Hz (0.1 Hz steps)
Default: 90.0 Hz

150 Hz FREQUENCY

Command: 150HZ=
Values: 135.0 Hz to 165.0 Hz (0.1 Hz steps)
Default: 150.0 Hz

90 / 150 Hz PHASE SHIFT

Command: PHASE=
Values: 0 to 359.99 degrees (0.01 degrees)
Default: 0

ADF

RF LEVEL

Command: RF LEVEL=
dBm Values: -120 dBm to +7 dBm
uV Values: .224 uV to 987 uV (to nearest .1 dBm)
mV Values: 1.00 mV to 501 mV (to nearest .1 dBm)
Default: -120.0 dBm

IDENTIFICATION MODE

Command: IDENT MODE=
Values: OFF, TONE, CODE, INT_RF
Default: TONE

INTERRUPTED CARRIER KEYING

Command: ADF INIT=
Values: ACTIVE, INACTIVE
Default: INACTIVE

MODULATION PERCENT

Command: ADF %MOD=
Values: 0.00% T0 99.00% (0.01% steps)
Default: 95.00%

MODULATION FREQUENCY

Command: ADF FREQ=
Values: 10.0 Hz to 18000.0 Hz (0.1 Hz steps)
Default: 1000.0 Hz

INDENTIFICATION CODE

Command: IDENT CODE=
Values: 6 characters of A through Z, 0 through 9
Default: JcAir

DOT TIME

Command: DOT TIME=
Values: 50 mS to 750 mS (1 mS steps)
Default: 150 mS

DASH TIME

Command: DASH TIME=
Values: 150 mS to 750 mS (1 mS steps)
Default: 450 mS

DOT / DASH SPACE TIME
Command: DOT DASH TIME=
Values: 50 mS to 250 mS (1 mS steps)
Default: 150 mS

CHARACTER SPACING TIME
Command: CHAR SPACE=
Values: 150 mS to 750 mS (1 mS steps)
Default: 450 mS

WORD RATE
Command: WORD RATE=
Values: 1.0 to 65 seconds (.1 second steps)
Default: 30 seconds

MARKER BEACON

RF LEVEL
Command: RF LEVEL=
dBm Values: -120 dBm to +7 dBm
uV Values: .224 uV to 987 uV (to nearest .1 dBm)
mV Values: 1.00 mV to 501 mV (to nearest .1 dBm)
Default: -120.0 dBm

MARKER BEACON MODE
Command: MKR MODE=
Values: OUTER, MIDDLE, INNER
Default: OUTER

MODULATION MODE
Command: IDENT MODE=
Values: CODE, TONE, OFF
Default: TONE

MODULATION PERCENT (OUTER MARKER)
Command: MKR %MOD=
Values: 0 T0 99.00% (0.01% steps)
Default: 95.00%

MODULATION FREQUENCY
Command: MKR FREQ=
Values: 10 Hz to 18000.0 Hz (0.1 Hz steps)
(outer) Default: 400.0 Hz (pulsed: 2 dashes / second)
(middle) Default: 1300.0 Hz (Pulsed: 95 dot-dash / minute)
(inner) Default: 3000.0 Hz (Pulsed: 6 dots / second)

COMMUNICATION

RF LEVEL
Command: RF LEVEL=
dBm Values: -120 dBm to +7 dBm
uV Values: .224 uV to 987 uV (to nearest .1 dBm)
mV Values: 1.00 mV to 501 mV (to nearest .1 dBm)
Default: -120.0 dBm

TONE #1 PERCENT MODULATION
Command: COM %MOD1=
Values: 0 to 99.00% (0.01% steps)
Default: 30.00%

TONE #2 PERCENT MODULATION
Command: COM %MOD2=
Values: 0 to 99.00% (0.01% steps)
Default: 00.00%

TOTAL PERCENT MODULATION
Command: TOTAL %MOD=
Values: 0 to 99.00% (0.01% steps)
Default: 30.00%

TONE #1 FREQUENCY
Command: COM FREQ1=
Values: 10 Hz to 18000.0 Hz (.1 Hz steps)
Default: 1000.0 Hz

TONE #2 FREQUENCY
Command: COM FREQ2=
Values: 10 Hz to 18000.0 Hz (.1 Hz steps)
Default: 2000.0 Hz

SELCAL

RF LEVEL
Command: RF LEVEL=
dBm Values: -120 dBm to +7 dBm
uV Values: .224 uV to 987 uV (to nearest .1 dBm)
mV Values: 1.00 mV to 501 mV (to nearest .1 dBm)
Default: -120.0 dBm

RF ON/OFF
Command: SCL RF KEY=
Values: ON, OFF
Default: OFF

SELECTIVE CALLING INITIATE
Command: SCL INIT=
Values: ACTIVE, INACTIVE
Default: INACTIVE

PULSE PERCENT MODULATION
Command: SCL %MOD=
Values: 0 to 99.00% (0.01% steps)
Default: 30.00%

TONE AMPLITUDE DIFFERENCE
Command: SCL DIFF=
Values: -40 to +40 dB (1 dB steps)
Default: 0 dB

PULSE #1 CODE
Command: SCL 1 CODE=
Values: AA - SS
Default: AB

PULSE #2 CODE
Command: SCL 2 CODE=
Values: AA - SS
Default: CD

PULSE #1 TONE #1 FREQUENCY
Command: SCL 1 TONE 1=
Values: 100 to 9999.9 Hz (0.1 Hz steps)

PULSE #1 TONE #2 FREQUENCY
Command: SCL 1 TONE 2=
Values: 100 to 9999.9 Hz (0.1 Hz steps)

PULSE #2 TONE #1 FREQUENCY
Command: SCL 2 TONE 1=
Values: 100 to 9999.9 Hz (0.1 Hz steps)

PULSE #2 TONE #2 FREQUENCY
Command: SCL 2 TONE 2=
Values: 100 to 9999.9 Hz (0.1 Hz steps)

PULSE #1 TIME
Command: SCL 1 TIME=
Values: 0 to 2.000 S (0.001 S steps)
Default: 1 S

PULSE #2 TIME
Command: SCL 2 TIME=
Values: 0 to 2.000 S (0.001 S steps)
Default: 1 S

GAP TIME
Command: SCL GAP TIME=
Values: 0 to 999 mS (1 mS steps)
Default: 500 mS

TEST FREQUENCY
Command: SCL TEST FREQ=
Values: 10 Hz to 18000.0 Hz (.1 Hz steps)
Default: 1000.0 Hz

TEST TONE PERCENT MODULATION
Command: SCL TEST%MOD=
Values: 0 to 99.00% (0.01% steps)
Default: 00.00%

MP MASTER
MA35792